FEDERAL SIZE REGULATIONS FOR COMMERCIAL MOTOR VEHICLES

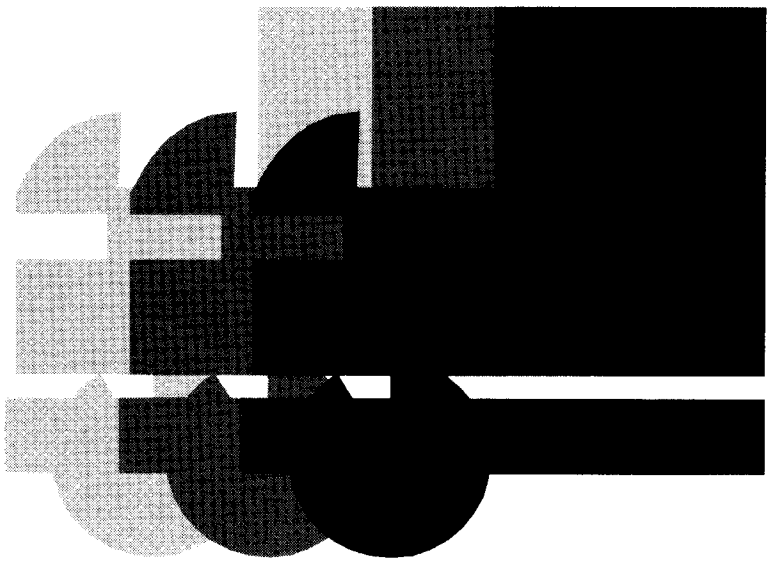

U.S. Department
of Transportation

**Federal Highway
Administration**

TABLE OF CONTENTS

INTRODUCTION 1

WIDTH LIMITS 1

LENGTH LIMITS 2

- TRUCK TRACTOR-SEMITRAILER COMBINATIONS 2
- TRUCK TRACTOR-SEMI-TRAILER-TRAILER COMBINATIONS 3
- BUSES 3
- GRANDFATHERED SEMITRAILER LENGTHS 3
- SPECIALIZED EQUIPMENT 5
  - Automobile and Boat Transporters 5
  - B-train Combinations 8
  - Beverage Semitrailers 8
  - Maxi-cube Vehicles 9
  - Saddlemount and Saddlemount with Fullmount Combinations 9
  - Dromedaries 10

LENGTH AND WIDTH EXCLUSIVE DEVICES 11

NATIONAL NETWORK 12

REASONABLE ACCESS 12

ISTEA FREEZE 12

CITATIONS 17

INTRODUCTION

The Federal Government began to regulate the size of trucks when the Federal-Aid Highway Act of 1956 established a maximum vehicle width of 2.44 m (96 inches) on Interstate highways. This was increased to 2.6 m (102 inches) for buses in 1976 and to 2.6 m (102 inches) for all commercial motor vehicles (CMV's) by the Surface Transportation Assistance Act of 1982 (STAA). In addition, the STAA extended the 2.6 m (102-inch) limit to a "National Network" (NN) of highways (See National Network). The STAA also enacted certain Federal length limits on the NN. There is no Federal height limit, so States may set their own. Most of them range from 4.11 m (13 feet, 6 inches) to 4.27 m (14 feet), with exceptions for lower clearances on particular roads.

WIDTH LIMITS

The maximum width limit for CMV's on the NN and reasonable access routes (See National Network and Reasonable Access) was originally established at 102 inches, except for Hawaii where it is 2.74 m (108 inches). To standardize vehicle width on an international basis, the 102-inch width limit was interpreted to mean the same as its approximate metric equivalent, 2.6 meters (102.36 inches) (See Figure 1).

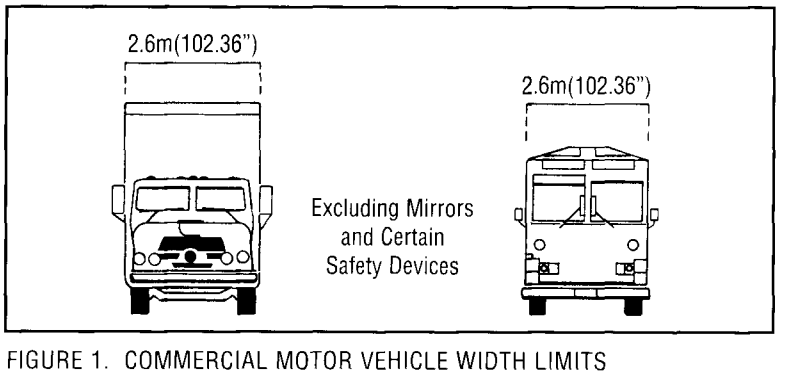

FIGURE 1. COMMERCIAL MOTOR VEHICLE WIDTH LIMITS

Federal width limits do not apply to special mobile equipment which consists of self-propelled vehicles not designed or used primarily for the transportation of persons or property and only incidentally moved over the highways. Specifically, military or farm equipment; instruments of husbandry; road construction or maintenance machinery; and emergency apparatus, including police and fire emergency equipment, are special mobile equipment. States may issue permits for these vehicles at their discretion. However, States must issue permits for other overwidth vehicles not covered by the special mobile equipment exemption to operate on the NN.

LENGTH LIMITS

The Federal length limits are principally minimums that States must allow for the following vehicles on the NN and reasonable access routes.

TRUCK TRACTOR-SEMITRAILER COMBINATIONS

The minimum allowable length limit for the semitrailer in this combination is 14.63 m (48 feet) or the grandfathered limit for a particular State (See Grandfathered Semitrailer Lengths). A State may not impose an overall length limit on a truck tractor-semitrailer combination operating on the NN or reasonable access routes, even if the trailer is longer than the allowable length required by Federal law (See figure 2).

A truck tractor is defined as a non-cargo-carrying power unit used in combination with a semitrailer. A truck tractor that carries cargo makes the resulting combination vehicle subject only to State length limits. The only instances where Federal regulations apply to a combination vehicle with truck tractor carrying cargo involve dromedaries (see page 10) and automobile/boat transporters (see page 5).

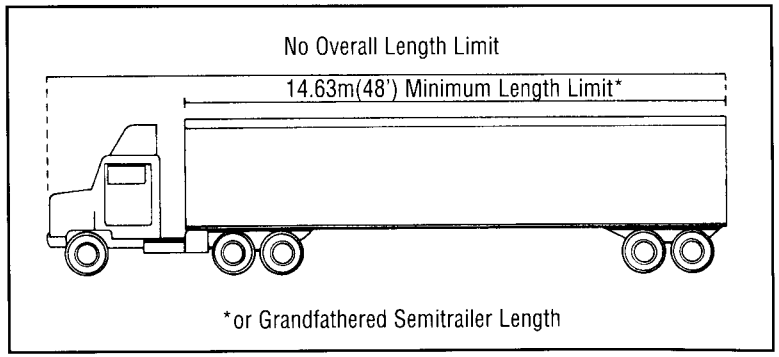

FIGURE 2. TRUCK TRACTOR-SEMITRAILER COMBINATION

TRUCK TRACTOR-SEMITRAILER-TRAILER COMBINATIONS

The minimum length that States must allow for the trailers and semitrailers in these combinations on the NN is 8.53 m (28 feet). States must also allow the continued use of semitrailers 8.69 m (28 feet, 6 inches) long that were in use on December 1, 1982, provided the overall length of the combination does not exceed 19.81 m (65 feet). The maximum length States may allow is determined by the Intermodal Surface Transportation Efficiency Act of 1991 (ISTEA) freeze (See ISTEA Freeze).

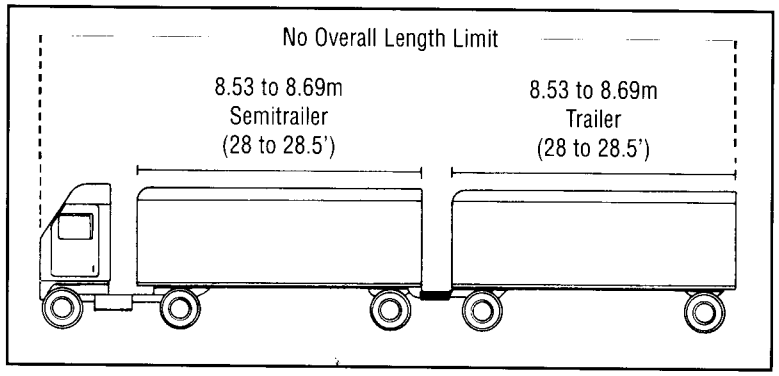

FIGURE 3. TRUCK TRACTOR-SEMITRAILER-TRAILER COMBINATION

BUSES

States must allow buses 13.72 m (45 feet) in length to operate on the NN and reasonable access routes.

GRANDFATHERED SEMITRAILER LENGTHS

Semitrailers up to the maximum length that were actually and lawfully operating in a truck tractor-semitrailer combination in a State on December 1, 1982, may continue to operate after that date. To clarify what these lengths were for each State, "grandfathered" semitrailer lengths have been established by regulation (See Table 1).

TABLE 1 - GRANDFATHERED SEMITRAILER LENGTHS

STATE	Feet and Inches	Meters
Alabama	53-6	16.31
Alaska	48-0	14.63
Arizona	57-6	17.53
Arkansas	53-6	16.31
California	48-0 (1)	14.63
Colorado	57-4	17.48
Connecticut	48-0	14.63
Delaware	53-0	16.15
District of Columbia	48-0	14.63
Florida	48-0	14.63
Georgia	48-0	14.63
Hawaii	48-0	14.63
Idaho	48-0	14.63
Illinois	53-0	16.15
Indiana	48-6 (2)	14.78
Iowa	53-0	16.15
Kansas	57-6	17.53
Kentucky	53-0	16.15
Louisiana	59-6	18.14
Maine	48-0	14.63
Maryland	48-0	14.63
Massachusetts	48-0	14.63
Michigan	48-0	14.63
Minnesota	48-0	14.63
Mississippi	53-0	16.15
Missouri	53-0	16.15
Montana	53-0	16.15
Nebraska	53-0	16.15
Nevada	53-0	16.15
New Hampshire	48-0	14.63
New Jersey	48-0	14.63
New Mexico	57-6	17.53
New York	48-0	14.63
North Carolina	48-0	14.63
North Dakota	53-0	16.15
Ohio	53-0	16.15
Oklahoma	59-6	18.14
Oregon	53-0	16.15
Pennsylvania	53-0	16.15
Puerto Rico	48-0	14.63
Rhode Island	48-6	14.78
South Carolina	48-0	14.63
South Dakota	53-0	16.15
Tennessee	50-0	15.24
Texas	59-0	17.98
Utah	48-0	14.63
Vermont	48-0	14.63
Virginia	48-0	14.63
Washington	48-0	14.63
West Virginia	48-0	14.63
Wisconsin	48-0 (3)	14.63
Wyoming	57-4	17.48

(1) Semitrailers up to 53 feet may also operate without a permit by conforming to a kingpin-to-rearmost axle distance of 38 feet. Semitrailers that are consistent with 23 CFR 658.13(h) may operate without a permit provided the distance from the kingpin to the center of the rear axle is 46 feet or less.

(2) Semitrailers up to 53 feet in length may operate without a permit by conforming to a kingpin-to-rearmost axle distance of 40 feet 6 inches. Semitrailers that are consistent with 23 CFR 658.13(h) may operate without a permit provided the distance from the kingpin to the center of the rear axle is 46 feet or less.

(3) Semitrailers up to 53 feet in length may operate without a permit by conforming to a kingpin-to-rear axle distance of 41 feet, measured to the center of the rear tandem assembly. Semitrailers that are consistent with 23 CFR 658.13(h) may operate without a permit provided the distance from the kingpin to the center of the rear axle is 46 feet.

SPECIALIZED EQUIPMENT

Length limits and other provisions have been adopted for six types of specialized equipment: Automobile and boat transporters, B-train combinations, beverage semitrailers, maxi-cube vehicles, saddlemount combinations, and dromedaries.

Automobile and Boat Transporter Combinations

States must allow conventional automobile and boat transporters, that is, those with a fifth-wheel hitch located on the tractor frame over the drive axle or axles, to be up to 19.81 m (65 feet) in overall length. States must allow "stinger-steered" automobile and boat transporters, that is, those with the fifth-wheel hitch located on a drop frame positioned below and behind the rear tractor axle, to be up to 22.86 m (75 feet) in overall length. Automobile and boat transporters may carry cargo on the power unit and the cargo may overhang the vehicle by 0.91 m (3 feet) in the front and 1.22 m (4 feet) in the rear (See Figures 4 and 5).

Boats may also be transported on a straight truck towing a trailer using typically a ball and socket connection subject to a 19.81 m (65-foot) minimum overall length limit and other conditions the same as above (See Figures 6, 7 and 8).

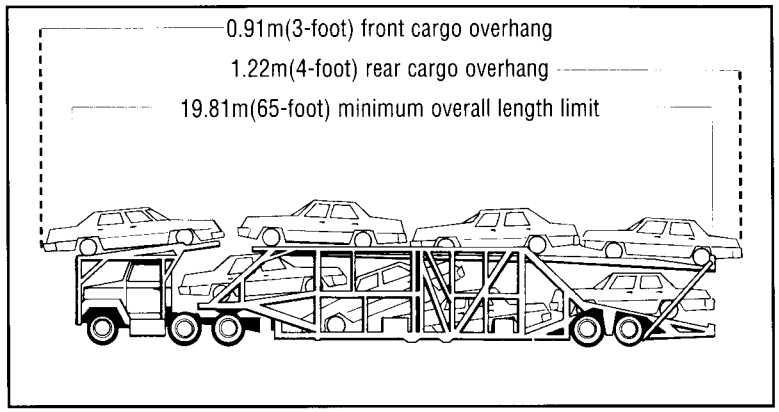

FIGURE 4. CONVENTIONAL AUTOMOBILE TRANSPORTER COMBINATION

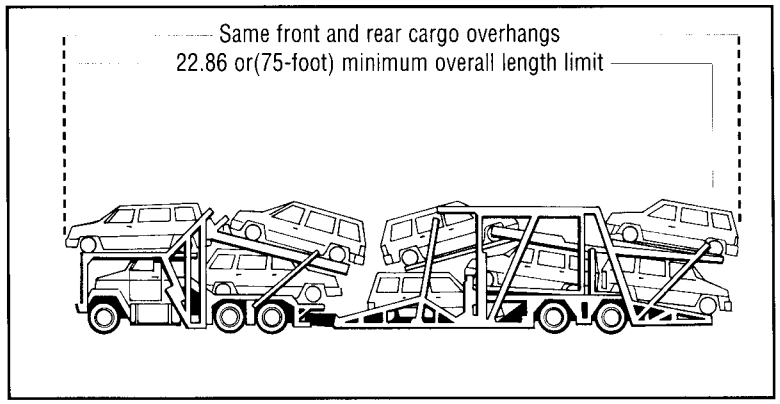

FIGURE 5. STINGER-STEERED AUTO TRANSPORTER COMBINATION

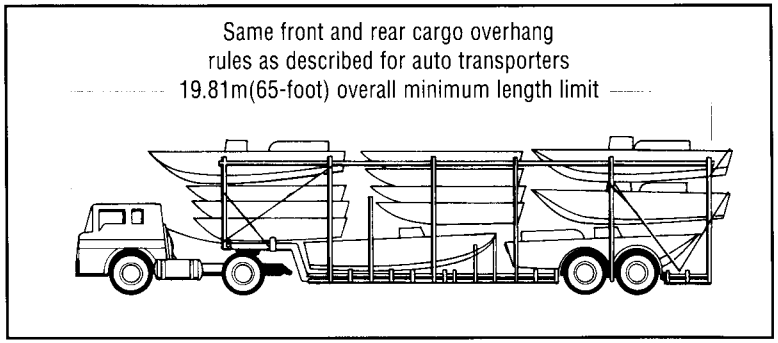

FIGURE 6. CONVENTIONAL BOAT TRANSPORTER COMBINATION

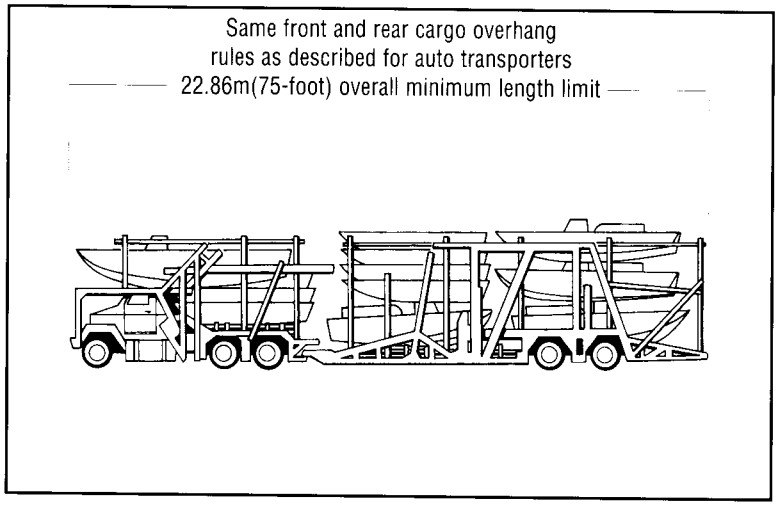

FIGURE 7. STINGER-STEERED BOAT TRANSPORTER

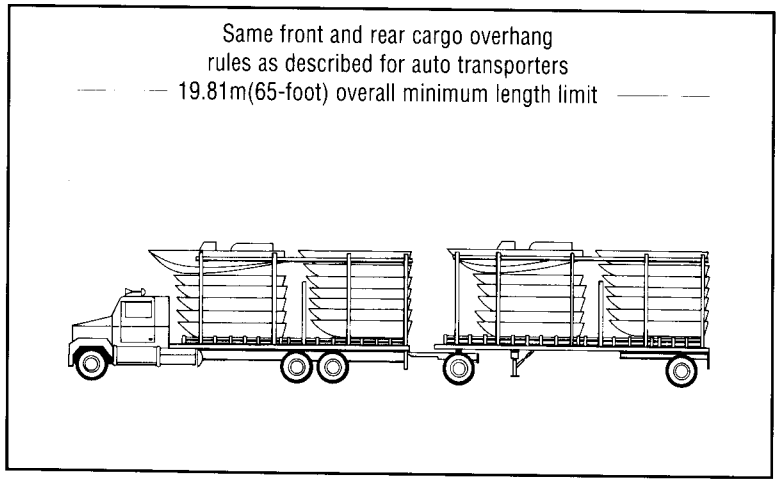

FIGURE 8. STRAIGHT TRUCK TOWING A TRAILER TRANSPORTING BOATS

B-train Combinations

A "B-train" is a truck tractor-semitrailer-semitrailer combination. In this combination, the two trailing units are connected by a fifth wheel attached to a frame under the first semitrailer that extends beyond the rear of that semitrailer (the so-called "B-train" hitch). The second semitrailer connects to the first at this fifth wheel (See Figure 9). B-train combinations are subject to the same length limits as truck tractor-semitrailer-trailer combinations.

When no semitrailer is attached to the B-train hitch, the assembly is included in the length measurement of the first semitrailer, and the 14.63 m (48-foot) (or grandfathered) length applies.

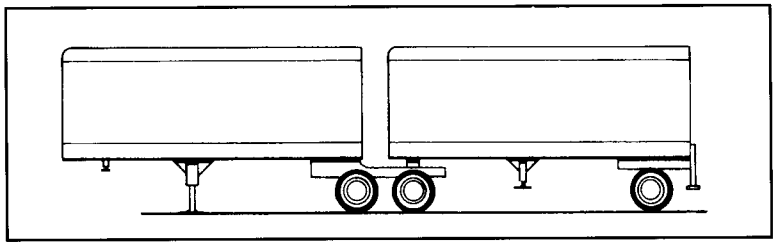

FIGURE 9. B-TRAIN SEMITRAILER-SEMITRAILER COMBINATION

Beverage Semitrailers

This is a drop frame, side-access semitrailer designed and used to transport and deliver bottled or canned beverages. The upper coupler plate may extend beyond the front of the semitrailer, but not beyond a semicircle whose radius is from the kingpin to the front corner of the semitrailer. (See Figure 10). The minimum and maximum trailer length is 8.53 m (28 feet) plus the length of the extended upper coupler plate. States may not impose an overall length limit on a combination of a truck tractor and two of these trailers.

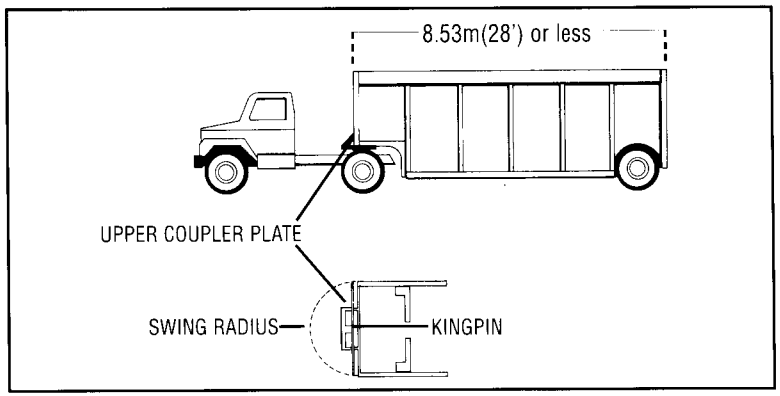

FIGURE10. BEVERAGE SEMITRAILER (AND TRAILER)

Maxi-cube Vehicles

These are combination vehicles consisting of a straight truck and a trailing unit, both of which are designed to carry cargo. The truck has a detachable or permanently mounted cargo box which may be loaded or unloaded through the trailing semitrailer or trailer. Neither cargo box may exceed 10.36 m (34 feet) in length, excluding the drawbar or hitching device; the distance from the front of the first to the rear of the second cargo box may not exceed 18.29 m (60 feet), including the space between them; and the overall length of the combination vehicle may not exceed 19.81 m (65 feet), including the space between the cargo boxes. (See Figure 11).

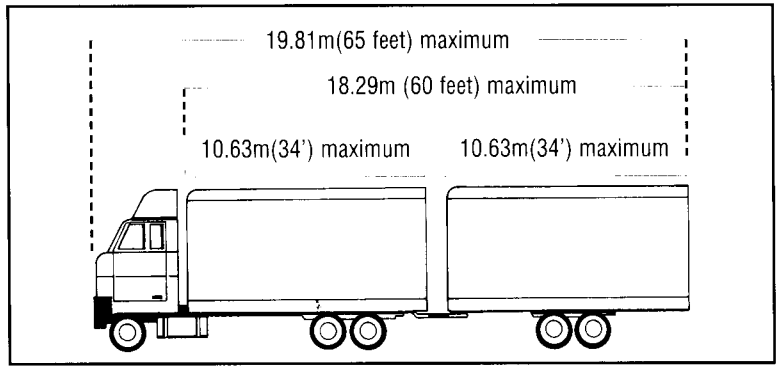

FIGURE 11. MAXI-CUBE VEHICLE

Saddlemount and Saddlemount with Fullmount Combinations

Saddlemount and saddlemount with fullmount combinations consist of a truck tractor towing other vehicles. The front axle of each towed vehicle is mounted on top of the frame of the vehicle in front. A fullmount is a vehicle mounted entirely on the frame of the first or last vehicle in the combination (See Figure 12). States must allow the towing vehicle to pull at least three other vehicles and the combination to have a 22.86 m (75-foot) minimum overall length on the NN and reasonable access routes.

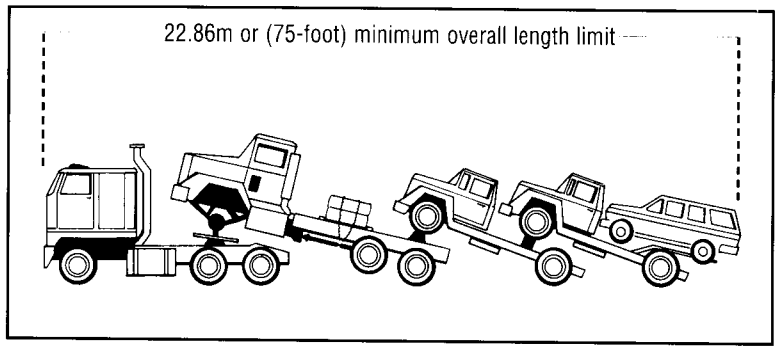

FIGURE 12. SADDLEMOUNT WITH FULLMOUNT COMBINATION

Dromedaries

A dromedary is a box, deck, or plate mounted behind the cab and forward of the fifth wheel on the frame of the power unit of a truck tractor-semitrailer combination to carry freight (See Figures 13 and 14). Truck tractors so equipped on December 1, 1982, are subject, during their useful lives, to the same Federal length provisions as any other truck tractor-semitrailer combinations. The burden of proving such legal operation on December 1, 1982, rests upon the operator of the equipment. Each State may decide for itself whether dromedary-equipped power units placed in operation after that date should be treated as truck tractors or as straight trucks under State length limits.

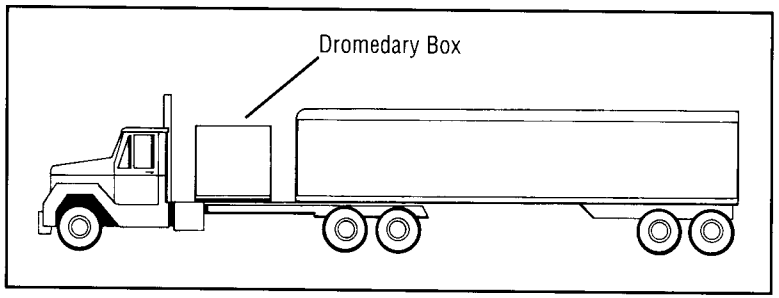

FIGURE 13. DROMEDARY BOX

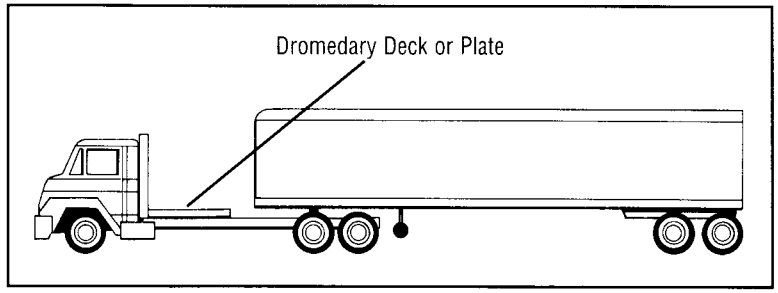

FIGURE 14. DROMEDARY DECK OR PLATE

One additional vehicle type which is widely used in commercial operations, but not subject to any Federal length regulation, is the straight truck. The authority for regulating the length of this vehicle remains entirely with each State.

LENGTH AND WIDTH EXCLUSIVE DEVICES

States must allow certain devices to extend beyond the 2.6 m (102-inch) width limit on the NN and reasonable access routes. These include rear-view mirrors, turn signal lamps, marker lamps and hand-holds for cab entry/egress, flexible fender extensions, mud flaps, splash and spray suppressant devices, and load-induced tire bulge. The Federal Highway Administration currently allows States to exclude other non-cargo-carrying safety devices which do not extend more than 76 mm (3 inches) from each side of a trailer, such as corner caps, rear and side door hinges and their protective hardware, rain gutters, side marker lamps, lift pads for TOFC (piggyback) trailers, hazardous materials placards, tarp and tarp hardware, tiedown assemblies on platform trailers, wall variations from true flat, and weevil pins and sockets on lowbed trailers.

States must also exclude from the measurement of trailer length, devices identified by the FHWA whose function is related to the safe and efficient use of a trailer and which are not capable of carrying cargo. The list of such devices is currently limited to refrigeration units and air compressors. However, States may also exclude, at the front of a trailer aerodynamic devices, certificate holders (manifest box), door vent hardware, electrical connectors, front couplers (used on combination road-and-rail semitrailers), gladhands, handholds, hazardous materials placards, heaters, ladders, pickup plate lip, upper coupler, pump offline on tank trailers, removable bulkheads, removable stakes, stabilizing jacks, stake pockets, steps, tarp baskets, tiedown devices used by automobile transporters, tire carriers, and winches for front-loading trailer.

At the rear of the trailer, States may exclude aerodynamic devices, air compressors, B-train assemblies, flippers used by automobile transporters to stabilize loads, handholds, hazardous materials placards, ladders, liftgates, pintle hooks, removable stakes, resilient bumper blocks, splash and spray suppressant devices, stake pockets, steps, and winches.

NATIONAL NETWORK

The STAA authorized the establishment of a "National Network" for trucks where Federal width and length limits would apply. It includes the Interstate System and other designated highways which, on June 1, 1991, were a part of the Federal-Aid Primary System in effect at that time. The NN now totals over 321 800 km (200,000 miles) of highways across the Nation.

REASONABLE ACCESS

States must allow vehicles which do not exceed the minimum size limits applicable to the NN (See Width and Length Limits) to have reasonable access between the NN and terminals and facilities for food, fuel, repairs, and rest. Terminals are defined as any location where freight originates, terminates, or is handled in the transportation process. Access must be allowed up to 1.61 km (1 mile) from the NN by the most reasonable and practicable safe route. For access to termini and service facilities beyond 1.61 km (1 mile) from the NN, the route may be requested from the State. Access must be granted if the vehicle can safely travel the route as determined by a test drive. If a State does not act upon a request within 90 days, access is automatically granted. If access is granted to one vehicle type, it applies to all vehicles of the same type, regardless of carrier.

States must also allow access between the NN and points of loading and unloading to household goods carriers, motor carriers of passengers, and any truck tractor-semitrailer combination in which the semitrailer has a length equal to or less the 8.53m (28 feet), or 8.69m (28.5 feet) for appropriately grandfathered equipment, and which generally operates as part of a truck tractor-semitrailer-trailer combination.

ISTEA FREEZE

The Intermodal Surface Transportation Efficiency Act of 1991 (ISTEA) froze the weights of truck tractors with two or more trailing units operating on the Interstate System at the limits actually and lawfully in effect for such vehicles in a State on June 1, 1991.

The ISTEA also froze the maximum length of the cargo-carrying units of CMVs with two or more such units on the NN (See National Network). This value may not exceed whatever maximum lengths were actually and lawfully in effect in a State on June 1, 1991.

The FHWA published a list of weight limits on the Interstate System and length limits on the NN in a final rule June 13, 1994. (See Tables 2A and 2B. Table 2A is in English units and Table 2B is in metric units.)

INTRODUCTORY NOTE TO TABLE 2A AND TABLE 2B:

Listed for each State by combination type is either:

1. The maximum cargo-carrying length (shown in feet or meters), and/or the maximum allowable gross weight (listed in 1,000 pounds or kilograms) if the combination operates as a long combination vehicle (LCV); or
2. A notation that such vehicle is not allowed (indicated by a "No").

CMVs are categorized as follows: 1. A CMV combination consisting of a truck tractor and two trailing units, 2. A CMV combination consisting of a truck tractor and three trailing units, 3. CMV combinations with two or more cargo-carrying units not included in descriptions 1 or 2.

In the following tables the left number is the maximum cargo-carrying length measured in feet or meters from the front of the first cargo unit to the rear of the last cargo unit. This distance is not to include length exclusive devices which have been approved by the Secretary of Transportation or by any State. The right number is the maximum gross weight in thousands of pounds or kilograms that the type of vehicle can carry when operating as an LCV on the Interstate System.

TABLE 2A - STATUS OF OPERATION OF VEHICLES SUBJECT TO THE ISTEA FREEZE AND THEIR MAXIMUM SIZE AND WEIGHT LIMITS IN ENGLISH UNITS

State	1 Truck tractor and 2 trailing units	2 Truck tractor and 3 trailing units	3 Other
ENGLISH UNITS :	Length in Feet ('),	Weight in 1,000 pounds (K)	
Alabama	No	No	No
Alaska	95'	110'	83'
Arizona	95' 129K	95' 129K	(1) 69' - 98'
Arkansas	No	No	No
California	No	No	No
Colorado	111' 110K	115.5' 110K	78'
Connecticut	No	No	No
Delaware	No	No	No
District of Columbia	No	No	No
Florida	106' (2)	No	No
Georgia	No	No	No
Hawaii	65' (2)	No	No
Idaho	95' 105.5K	95' 105.5K	(1) 78' - 98
Illinois	No	No	No
Indiana	106' 127.4K	104.5' 127.4K	58'
Iowa	100' 129K	100' 129K	78'
Kansas	109' 120K	109' 120K	No
Kentucky	No	No	No
Louisiana	No	No	No
Maine	No	No	No
Maryland	No	No	No
Massachusetts	104' 127.4K	No	No
Michigan	58' 164K	No	No
Minnesota	No	No	No
Mississippi	65' (2)	No	No
Missouri	110' 120K (4)	109' 120K	No
Montana	93' 137.8K	100' 131.06K	(1) 88' - 103'
Nebraska	95' 95K	95' (2)	68'
Nevada	95' 129K	95' 129K	98'
New Hampshire	No	No	No
New Jersey	No	No	No
New Mexico	86.4K (3)	No	No
New York	102' 143K	No	No
North Carolina	No	No	No
North Dakota	103' 105.5K	100' 105.5K	103'
Ohio	102' 127.4K	95' 115K	No
Oklahoma	110' 90K	95' 90K	No
Oregon	68' 105.5K	96' 105.5K	70'5"
Pennsylvania	No	No	No
Puerto Rico	No	No	No
Rhode Island	No	No	No
South Carolina	No	No	No
South Dakota	100' 129K	100' 129K	(1) 73' - 78'
Tennessee	No	No	No
Texas	No	No	No
Utah	95' 129K	95' 129K	(1) 88' - 105'
Vermont	No	No	No
Virginia	No	No	No
Washington	68' 105.5K	No	68'
West Virginia	No	No	No
Wisconsin	No	No	No
Wyoming	81' 117K	No	(1) 78' - 85'

(1) State submission includes multiple vehicles in this category. The values listed represent the range of cargo-carrying lengths for the vehicles covered by this regulation. For details on specific vehicle combinations, see 23 CFR 658 appendix C.

(2) No maximum weight is established as this vehicle combination is not considered an "LCV" per the ISTEA definition. Florida's combinations are not allowed to operate on the Interstate System, and the combinations for Hawaii, Mississippi, and Nebraska are not allowed to exceed 80,000 pounds.

(3) No maximum cargo-carrying length is established for this combination. Because State law limits each trailing unit to not more than 28.5 feet in length, this combination is allowed to operate on all NN routes under the authority of the STAA of 1982, regardless of actual cargo-carrying length. The maximum weight listed is New Mexico's maximum allowable gross weight on the Interstate System under the grandfather authority of 23 U.S.C. 127.

(4) These dimensions do not apply to the same combinations. The 110-foot length is limited to vehicles entering from Oklahoma, also limited to 90K gross weight. The 120K gross weight is limited to vehicles entering from Kansas, also limited to a cargo-carrying length of 109 feet.

TABLE 2B. STATUS OF OPERATION OF VEHICLES SUBJECT TO THE ISTEA FREEZE AND THEIR MAXIMUM SIZE AND WEIGHT LIMITS IN METRIC UNITS

State	1 Truck tractor and 2 trailing units	2 Truck tractor and 3 trailing units	3 Other
METRIC UNITS :	Length in Meters (m),	Weight in kilograms (kg)	
Alabama	No	No	No
Alaska	28.96 m	33.53 m	25.30 m

Arizona	28.96 m 58 510 kg	28.96 m 58 510 kg	(1) 21.03 m - 29.87 m
Arkansas	No	No	No
California	No	No	No
Colorado	33.83 m 49 900 kg	35.20 m 49 900 kg	23.77 m
Connecticut	No	No	No
Delaware	No	No	No
District of Columbia	No	No	No
Florida	32.31 m (2)	No	No
Georgia	No	No	No
Hawaii	19.81 m (2)	No	No
Idaho	2896 m 47 850 kg	28.96 m 47 850 kg	(1) 23.77 m - 29.87 m
Illinois	No	No	No
Indiana	32.31 m 57 790 kg	31.85 m 57 790 kg	17.68 m
Iowa	30.48 m 58 510 kg	30.48 m 58 510 kg	23.77 m
Kansas	33.22 m 54 430 kg	33.22 m 54 430 kg	No
Kentucky	No	No	No
Louisiana	No	No	No
Maine	No	No	No
Maryland	No	No	No
Massachusetts	31.70 m 57 790 kg	No	No
Michigan	17.68 m 74 390 kg	No	No
Minnesota	No	No	No
Mississippi	19.81 m (2)	No	No
Missouri	33.53 m 54 430 kg(4)	33.22 m 54 430 kg	No
Montana	28.35 m 62 510 kg	30.48 m 59 450 kg	(1) 26.82 m - 31.39 m
Nebraska	28.96 m 43 090 kg	28.96 m (2)	20.73 m
Nevada	28.96 m 58 510 kg	28.96 m 58 510 kg	29.87 m
New Hampshire	No	No	No
New Jersey	No	No	No
New Mexico	39 190 kg (3)	No	No
New York	31.09 m 64 860 kg	No	No
North Carolina	No	No	No
North Dakota	31.39 m 47 850 kg	30.48 m 47 850 kg	31.39 m
Ohio	31.09 m 57 790 kg	28.96 m 52 160 kg	No
Oklahoma	33.53 m 40 820 kg	28.96 m 40 820 kg	No
Oregon	20.73 m 47 850 kg	29.26 m 47 850 kg	21.46 m
Pennsylvania	No	No	No
Puerto Rico	No	No	No
Rhode Island	No	No	No
South Carolina	No	No	No
South Dakota	30.48 m 58 510 kg	30.48 m 58 510 kg	(1) 22.25 m - 23.77 m
Tennessee	No	No	No
Texas	No	No	No
Utah	28.96 m 58 510 kg	28.96 m 58 510 kg	(1) 26.82 m - 32.00 m
Vermont	No	No	No
Virginia	No	No	No
Washington	20.73 m 47 850 kg	No	20.73 m
West Virginia	No	No	No

Wisconsin	No	No	No
Wyoming	24.69 m 53 070 kg	No	(1) 23.77 m - 25.91 m

(1) State submission includes multiple vehicles in this category. The values listed represent the range of cargo-carrying lengths for the vehicles covered by this regulation. For details on specific vehicle combinations, see 23 CFR 658 appendix C.

(2) No maximum mass is established as this vehicle combination is not considered an "LCV" per the ISTEA definition. Florida's combinations are not allowed to operate on the Interstate System, and the combinations for Hawaii, Mississippi, and Nebraska are not allowed to exceed 36 290 kilograms.

(3) No maximum cargo-carrying length is established for this combination. Because State law limits each trailing unit to not more than 8.69 meters in length, this combination is allowed to operate on all NN routes under the authority of the STAA of 1982, regardless of actual cargo- carrying length. The maximum mass listed is New Mexico's maximum allowable on the Interstate System under the grandfather authority of 23 U.S.C. 127.

(4) These dimensions do not apply to the same combinations. The 33.53m length is limited to vehicles entering from Oklahoma, also limited to 40820kg gross mass. The 54430kg gross mass is limited to vehicles entering from Kansas, also limited to a cargo carrying length of 33.22m.

CITATIONS

The regulations in this brochure are found in 23 CFR Part 658. They reflect statutory provisions found in 49 U.S.C. 31111, 31112, 31113, and 31114.

For additional copies contact:

Federal Highway Administration
Office of Motor Carrier Information Analysis
400 7th Street, SW, Room 3104
Washington, DC 20590
(202) 366-1861

NOTES:

This pamphlet explains Federal length and width limits for certain commercial motor vehicles and where these vehicles may operate. It paraphrases the regulations. In case of a dispute, the actual regulations govern.

All dimensional units are given in metric and English values in accordance with the Federal Highway Administration metric conversion policy published in the Federal Register on June 11, 1992 (57 FR 24843) and the Notice of Interpretation regarding vehicle size and weight limits published in the Federal Register on October 7, 1994 (59 FR 51060).

Publication No. FHWA-MC-96-03
HIA-20/9-96 (25M)E