# Development of Performance Specifications for Collision Avoidance Systems for Lane Change, Merging and Backing
# Task 3 Interim Report:
# Test of Existing Hardware Systems
# Part 1 - Sensor System Testing

**NOTE TO READER:**

**THIS IS A LARGE DOCUMENT**

Due to its large size, this document has been segmented into multiple files. All files separate from this main document file are accessible from links (blue type) in the table of contents or the body of the document.

# Development of Performance Specifications for Collision Avoidance Systems for Lane Change, Merging and Backing

## Task 3 Interim Report:

## Test of Existing Hardware Systems Part 1 - Sensor System Testing

**May 1995**

Prepared by :

Samuel Talmadge
Karen E. Yokoyama
Greg A. Shreve

TRW Space and Electronics Group

Scott Johnston

Transportation Research Center, Inc.

DOT/FHWA
101740

# Notice

This document is disseminated under the sponsorship of the Department of Transportation in the interest of information exchange. The opinions, findings and conclusions expressed in this publication are those of the author(s) and not necessarily those of the Department of Transportation or the National Highway Traffic Safety Administration. The United States Government assumes no liability for its contents or use thereof.

'The United States Government does not endorse products or manufacturers. If trade or manufacturers' names appear herein, it is only because they are considered essential to the object of this document and should not be construed as an endorsement.

# Preface

This is an interim report for presenting the test results obtained with the existing crash avoidance systems that were available for this project on lane change, merging, and backing. Given the limited availability of systems, the test results are in effect only for side "blind spot" and for backing systems. The report, which summarizes the work of Task 3 of Phase I of the project, consists of two volumes: "Sensor System Testing," prepared mainly by TRW, and "Human Factors Assessment of the Driver Interfaces," prepared mainly by VRTC.

In general, the results point out that more development is needed to have suitable crash avoidance systems. Significant efforts are necessary, for example, to better quantify the false and nuisance alarms of the systems, and to decrease the frequency rateseof those alarms.

The recommendations presented in the report must be merely considered as preliminary. This is due to the limited number and duration of the tests, and to the limited investigation on the human factors related to the vehicle-driver interface.

It is expected that the research that will be conducted during the remaining Phases, II and III, of this project will significantly contribute to the development of pertinent crash avoidance systems. The current schedule calls for completion of this research project in the third quarter of 1997.

Jose L. Bascunana
Project Manager
Office of Crash Avoidance Research
National Highway Traffic Safety Administration

Technical Report Documentation Page

| 1. Report No. | 2. Govcrnmcnf Accession No. | 3. Recipiennt I Catalog No. |
|---|---|---|
| 4. Title and Subtitle Development of Performance Specifications for Collision Avoidance Systems for Lane Change, Merging and Backing. Task 3 Interim Report: Test of Existing Hardware Systems, Part 1 - Sensor System Testing | | 5. Report Date May 1995 |
| | | 6. Performing Organization Code |
| 7. Author's Samuel Talmad e, Karen E. Yokoyama, Greg A. Shreve, and Scott Johnston | | 8. Performing Organization Report No. |
| 9. Performing Organization Name and Address TRW Space and Electronics Group One Space Park Redondo Beach, CA 90278 USA | | 10. Work Unit No. [TRAIS) |
| | | 11. Contract or Grant No. |
| 12. Sponsoring Agency Name and Address National Highway Traffic Safety Admin. (NHTSA) Office of Collision Avoidance Research (OCAR) 400 Seventh St. SW, Room 5301 Washington, D.C. 20590 USA | | 13. Type of Report and Period Covered Task Order Study June 1994 through May 1995 |
| | | 14. Sponsoring Agency Code NRD-51 |

15. Supplementary Note:
*F04606-90-D-0001/0052 (TRW-Air Force) under Air Force-NHTSA Inter-agency Agreement DTNH22-93-X-07022 (Air Force-NHTSA)

16. Abstract


Results from the testing of eleven Collision Avoidance Systems (CAS) for lane change, merge and backing are presented. Complete systems were tested for static pattern, latency time and dynamic response to potential targets. Testing was performed statically, in a controlled test track environment and on public roads to obtain operational and performance data. Sensor systems were mounted on a test vehicle equipped with a self-contained data acquisition system as well as calibrated video cameras for ground truth.

There was observed to be a wide scatter in the performance capability of the various sensor systems. Results from the lane change/merge sensor systems indicated that the measure of the True Negative (TN) response of the system could be a useful metric to judge the relative effectiveness of the system tested. Most of the systems in this category were simple proximity detectors, while those that claimed to discriminate against non-moving ground objects did so with only fair results.

Two of the four backing systems provided warnings to the driver and were based on ultrasonic technology. They proved to be extremely sensitive and prone to false alarms. Video systems for backing appear to be quite capable of extending the driver's field of regard. One appeared to be of limited utility at night.


| 17. Key Words | 18. Distribution Statement |
|---|---|
| Collision Avoidance Systems, Lane Change, Merging, Backing, Existing Hardware, Sensor Systems, Static and Dynamic Testing, Performance Capability | This document is available to the public through the National Technical Information Service, Springfield, VA 22161 |

| 19. Security Classif. (of ther Report) | 20. Security Classif. (of this page) | 21. No. of Pages | 22. Price |
|---|---|---|---|
| Unclassified | Unclassified | 253 | |

Form DOT F 1700.7 (8-72) Reproduction of completed page authorized

Table of Contents


1.0 Introduction 1

2.0 Data Acquisition 2

2.1 Test Bed Description 2

2.2 Target Car Description 4

3.1 Coordinate System and Equations 6

3.2 Projection and Relative Speed Calculations 8

3.3 Analysis Capability 9

4.0 Calibration and Error Analysis 14

4.1 Camera Calibration 14

4.2 Camera Pointing Angles 15

4.3 Accuracy 18

4.4 Error Propagation 23

5.0 Test Methodology 27

5.1 Static Tests 28

5.2 Dynamic Tests 30

5.2.1 Delay Time Tests 30

5.2.2 Persistence Time 31

5.3 Lane Change Tests 32

5.3.1 Passing 32

5.3.2 Passing With Clutter 33

5.3.3 Three Lane Test 33

5.3.4 Approach and Pass Test 34

5.3.5 Merge Test 34

5.3.6 Straight Backing Tests 36

5.3.7 Curved Backing Tests 37

5.4 Road Tests 38

5.5 Video Tests 39

5.5.1 Equipment 41

Taraets 41

Photometer/Filter 42

Grid 42

5.5.2 Testing 42
Field of View/Distortion 42
Resolution 42
Standard Contrast Test 42
Extended Contrast Test 43

6.0 Test Results 44

6.1 System "A" 45
6.1.1 System Description 45
6.1.2 Overview of System Performance 45
6.1.3 Test Results 45
Static Tests 45
Vertical Extent 46
Dynamic Tests 50
Perpendicular Delay Time 50
Parallel Delay Time 51
Persistence Time 51
Road Test 52

6.2 System "B" 54
6.2.1 System Description 54
6.2.2 Overview of System Performance 54
6.2.3 Test Results 54
Static Tests 54
Vertical Extent 55
Dynamic Tests 59
Perpendicular Delay Time 59
Parallel Delay Time 60
Persistence Time 61
Controlled Passing Tests - Target Vehicle Passing Sensor Vehicle 61
Controlled Passing Tests - Sensor Vehicle Passing Target Vehicle 64
Approach and Pass Tests 67
Three Lane Tests 67
Merge Tests 69
Road Test 69

6.3 System 'C" 74

6.4 System 'D" 75
6.4.1 System Description 75
6.4.2 Overview of System Performance 75
6.4.3 Test Results 75
Static Tests* 75
Vertical Extent 76

Dynamic Tests 80
Perpendicular Delay Time 80
Parallel Delay Time 81
Persistence Time 81
Controlled Passing Tests - Target Vehicle Passing Sensor Vehicle 82
Controlled Passing Tests - Sensor Vehicle Passing Target Vehicle 88
Approach and Pass Tests 88
Three Lane Tests 88
Merge Tests 92
Road Test 96

6.5 System "E" 101
6.5.1 System Description 101
6.5.2 Overview of System Performance 101
6.5.3 Test Results 101
Static Tests 101
Vertical Extent 105
Dynamic Tests 106
Perpendicular Delay Time 106
Parallel Delay Time 106
Persistence Time 107
Controlled Passing Tests - Target Vehicle Passing Sensor Vehicle 108
Controlled Passing Tests - Sensor Vehicle Passing Target Vehicle - 113
Approach and Pass Tests 113
Three Lane Tests 116
Merge Tests 116
Road Test 118

6.6 System "F" 120
6.6.1 System Description 120
6.6.2 Overview of System Performance 120
6.6.3 Test Results 120
Static Tests 120
Driver Side Sensor 121
Vertical Extent - Driver Side Sensor 125
Passenaer Side Sensor 125
Vertical Extent - Passenger Side Sensor 129
Dynamic Tests 129
Perpendicular Delay Time 129
Parallel Delay Time 131
Persistence Time 131
Controlled Passing Tests - Target Vehicle Passing Sensor Vehicle 132
Controlled Passing Tests - Sensor Vehicle Passing Target Vehicle 135
Approach and Pass Tests 135
Three Lane Tests 139

Merge Tests 139
Road Test 141

6.7 System "G" 143
6.7.1 System Description 143
6.7.2 Overview of System Performance 143
6.7.3 Test Results 143
Static Tests 143
Vertical Extent 144
Dynamic Tests 144
Perpendicular Delay Time 144
Parallel Delay Time 148
Persistence Time 148
Controlled Passing Tests - Target Vehicle Passing Sensor Vehicle 149
Controlled Passing Tests - Sensor Vehicle Passing Target Vehicle 154
Approach and Pass Tests 154
Three Lane Tests 157
Merge Tests 157
Road Test 159

6.8 System "H" 161
6.8.1 System Description 161
6.8.2 Overview of System Performance 161
6.8.3 Test Results 161
Static Tests 161
Vertical Extent 162
Dynamic Tests 165
Perpendicular Delay Time 165
Parallel Delay Time 165
Persistence Time 166
Controlled Passing Tests - Target Vehicle Passing Sensor Vehicle 166
Controlled Passing Tests - Sensor Vehicle Passing Target Vehicle 169
Approach and Pass Tests 169
Three Lane Tests 171
Road Test 173

6.9 System "P" 174
6.9.1 Overview 174
6.9.2 Comments 174
6.9.3 Testing 174
Field of View/Distortion 174
Resolution 175
Contrast 176

6.10 System "Q" 180
6.10.1 Overview 180
6.10.2 Comments 180
6.10.3 Testing 180
Field of View/Distortion 180
Resolution 181
Contrast 182

6.11 System "R" 186
6.11.1 System Description 186
6.11.2 Overview of System Performance 186
6.11.3 Test Results 186
Static Tests 186
Vertical Extent 189
Dynamic Tests 190
Perpendicular Delay Time 190
Parallel Delay Time 190
Persistence Time 191
Backing Tests - Straight Path 192
Backing Tests - Curved Path 196
Road Test 199

6.12 System "S" 201
6.12.1 System Description 201
6.12.2 Overview of System Performance 201
6.12.3 Test Results 201
Static Tests 201
Vertical Extent 204
Dynamic Tests 204
Perpendicular Delay Time 204
Persistence Time 206
Backing Tests - Straight Path 207
Backing Tests - Curved Path 209
Road Test 213

7.0 Static Pattern Comparison on the Legend and HMMWV 214

8.0 Conclusion 243

8.1 Lane Change/Merge Systems 244

8.2 Backing Systems 246

8.3 Video Systems 248

## 1.0 Introduction

Complete Collision Avoidance Systems (CAS) systems were tested, including components and subsystems for sensing, data processing and interfacing with the driver. This report is divided in two parts. Part 1, this volume, emphasizes testing of the sensor system and was led by TRW, while Part 2 emphasizes human factors and was led by the Vehicle Research and Test Center (VRTC). In this part testing included static tests to verify basic operation of the systems, followed by vehicle tests on the test track and finally by road tests to obtain operational and performance data. The purpose of this testing was to determine limits and capabilities of the hardware, and to assist in formulating performance requirements relative to IVHS safety needs. The tests were designed to encompass as many performance variables and factors as could be accommodated within budget and schedule constraints.

Table 1 .1-1 summarizes the systems tested and the technologies represented. Individual systems are hereby designated with an alphabet letter to protect disclosure of actual vendor names.

| SYSTEM | APPLICATION | SENSOR TECHNOLOGY |
|---|---|---|
| "A" | Lane Change | Ultrasonic |
| "B" | Lane Change | Radar |
| "C" | Lane Change | Laser |
| "D" | Lane Change | Radar |
| "E" | Lane Change | Radar |
| "F" | Lane Change | Laser |
| "G" | Lane Change | Radar |
| "H" | Lane Change | Radar |
| "P" | Backing | Video |
| "Q" | Backing | Video |
| "R" | Backing | Ultrasonic |
| "S" | Backing | Ultrasonic |

Table 1.1-1 : Summary of Systems Tested and Technologies Represented

This part of the report is divided into eight sections. Section 2 describes the data acquisition system including a description of the sensor vehicle and the target vehicle. The process by which data is retrieved and analyzed is summarized in Section 3. Camera calibration and error analysis is discussed in Section 4. Test methodology is addressed in Section 5. The bulk of the report is contained in Section 6 which summarizes the test results for all of the systems tested. System 'C" was not available for test during the scheduled period. Sensor system performance on the HMMWV platform is discussed in Section 7 followed by general conclusions in Section 8.

## 2.0 Data Acquisition

### 2.1 Test Bed Description

The vehicle carrying the sensor systems under test was an Acura Legend hereby designated as the sensor vehicle. The front and rear bumpers were removed and replaced with a metal framework. On this framework one could attach either sensors or diagnostic equipment. The backing sensors of course were placed at the rear of the car, while the lane change sensors were placed along the passenger side. Most of these sensors were placed near the rear of the car. Those with longer range were placed on a special shelf, designed to fit on the front passenger side door. In all cases where there were manufacturer's instructions, the sensor was placed accordingly. The Legend was fitted with a self-contained data acquisition system. At its heart was a Megadac, which digitized, time tagged and recorded on tape analog signals. Standard inputs into the data acquisition system were speed and wheel position. This unit was mounted in the trunk of the vehicle as can be seen from the photo in Figure 2.1-1. This photo also shows two of the ground truth cameras, which will be described below, along with the fifth wheel, which was used as the speed sensor. Other items mounted along the rear framework are three of the systems under test at the time the photo was taken.

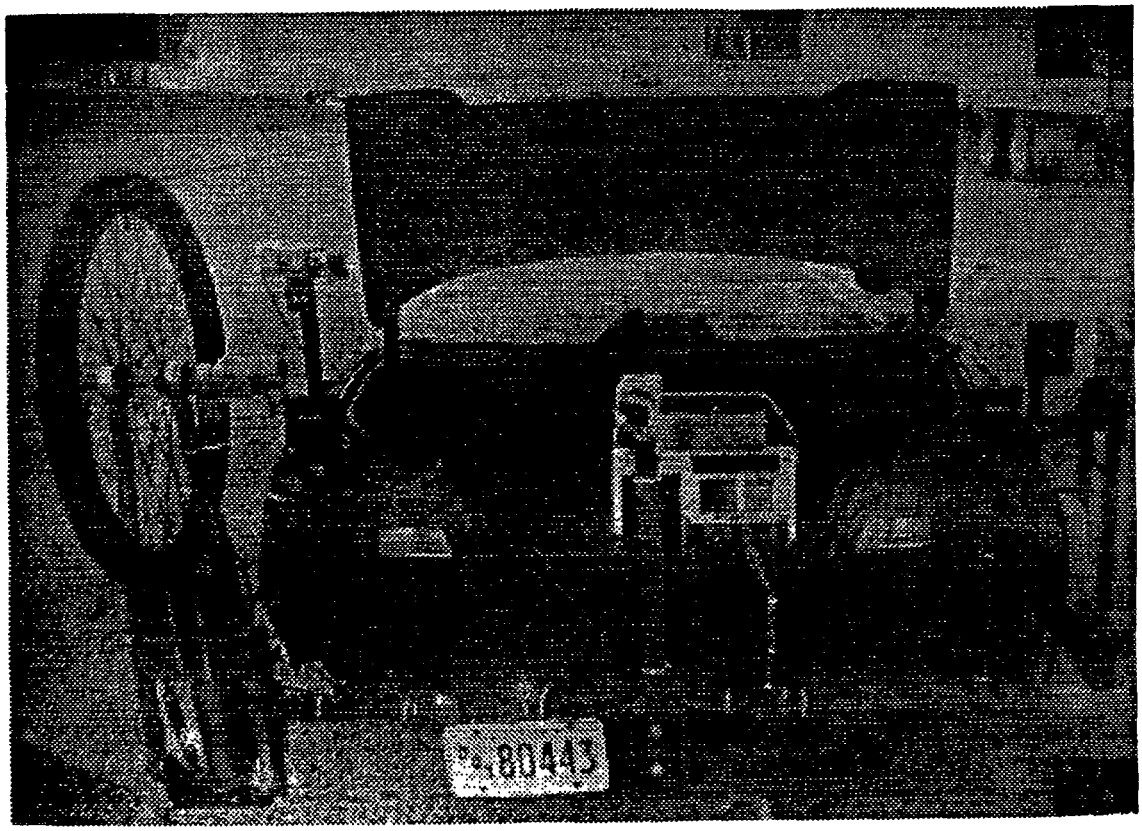

Fig. 2.1-1. Photograph of Acura Legend Configured as Sensor Test Car

On the rear seat of the vehicle was a laptop computer which initialized and controlled the Megadac data acquisition system via an IEEE 488 bus. Also in the rear of the vehicle were the time code generators, a 4:1 video combiner and a VCR. All of this hardware and the cameras that fed into the video system, along with associated hardware was assembled by the Vehicle Research and Test Center (VRTC). There were three external cameras mounted around the car, as seen in Fig. 2.1-2. Two wide angle cameras (designated W1 and W2) were mounted at the rear of the car. A third telephoto camera was mounted near the front bumper, along the passenger side. A fourth camera was mounted in the trunk, viewing the system displays. For the sensor system tests, it was more convenient to mount the displays in the trunk for easy recording. For human factor tests, the displays were of course mounted for easy viewing by the driver. Figure 2.1-2 also shows the recorded composite video scene of the four cameras.

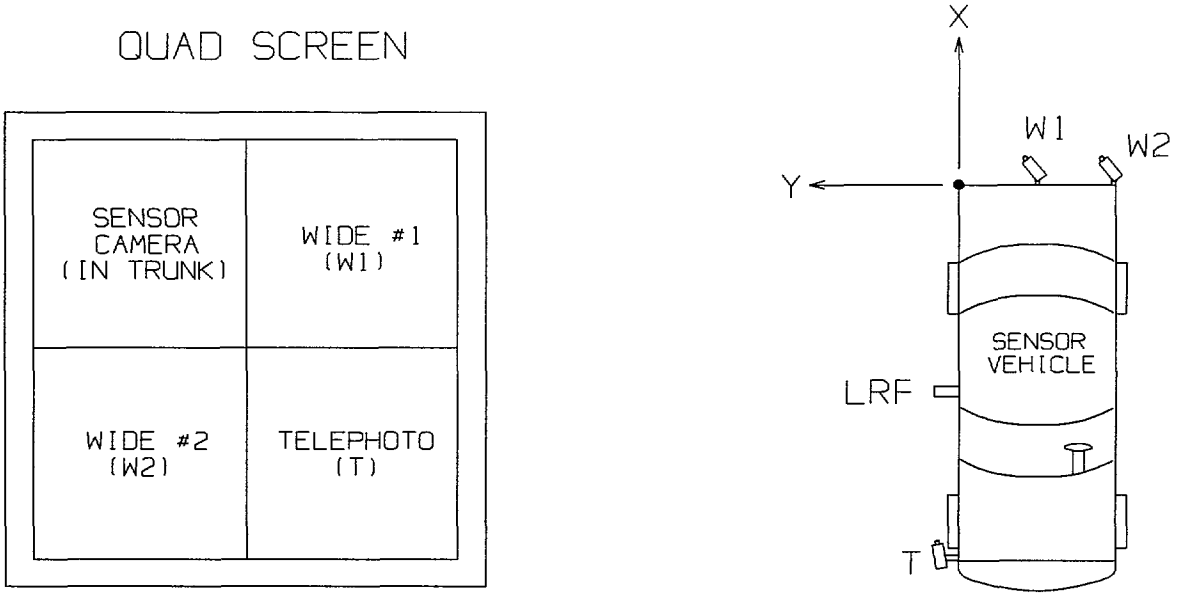


(a) Quad Screen Video Format

(b) Acura Legend Schematic

Fig. 2.1-2: Video Quad Screen and Schematic of Acura Legend

For lane change tests it was often useful to mount a Laser Atlanta ProSurvey 1000 laser rangefinder on the passenger door shelf looking backward. Through a mirror an operator in the front passenger seat could target the laser on the grill or license plate of a passing car and record the time dependent range to that vehicle. The real time ranging mode of the laser rangefinder updates every 55 msec but is output delayed by about .5 sec. The output, via RS232, went to a laptop computer which outputted an equivalent range via the parallel port to a parallel to analog converter. From there the signal went to the Megadac system. The calibration factor for this signal is 50 feet per volt. The maximum range of the device was 2500 feet to a suitable reflective target.

## 2.2 Target Car Description

For the controlled tests it was necessary to employ a specially delineated target car. For the early part of these tests it was a Ford Thunderbird, which later was changed to a Ford Taurus. In either case, posts were mounted to the approximate four corners of the car so that, in essence the car was replaced by a moving rectangle as can be seen in Figure 2.2-1. This figure shows the posts and their labels schematically, as well as a photo of the Thunderbird. It should be noted that the posts come up relatively high on the car so that they can be viewed from most angles by the recording video cameras.

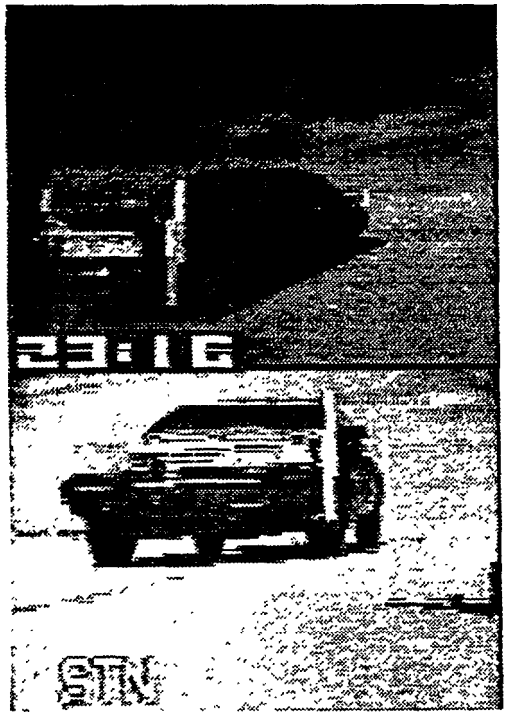

(a) Photograph of Ford Thunderbird

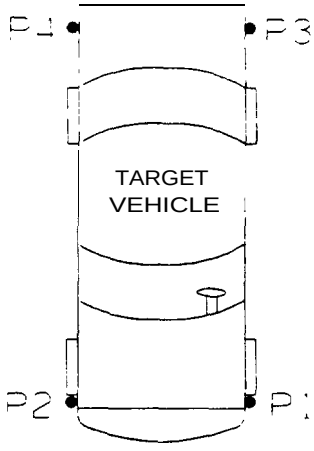


(b) Schematic of Ford Thunderbird

Figure 2.2-1 Photo and Schematic of Ford Thunderbird

The posts are covered with red-orange reflective tape. The purpose of the tape was to enhance the contrast of these posts relative to the background of the recorded scene. This scheme worked by filtering out wavelength below approximately 640 nm. Figure 2.2-2(a) shows the measured reflected spectrum of the tape (both specular and diffuse). Below about 620 nm there is a sharp rolloff in the amount of reflected light. Figure 2.2-2(b) shows the measured transmission

spectrum of a red glass filter used in these tests. It rolls off below about 640 nm. Also on this figure is a typical silicon response spectra (not measured) that would be characteristic of a video camera. By filtering the scene with these red filters it was hoped that the contrast of the posts could be enhanced. In general it worked best when the width of the post was about five pixels or greater. In other words, when the target car was reasonably close (within 25 feet of the rear bumper). It should be mentioned that when the sky was overcast, and therefore white as opposed to blue, the contrast was at a minimum because there still was a significant red component to the overcast sky.

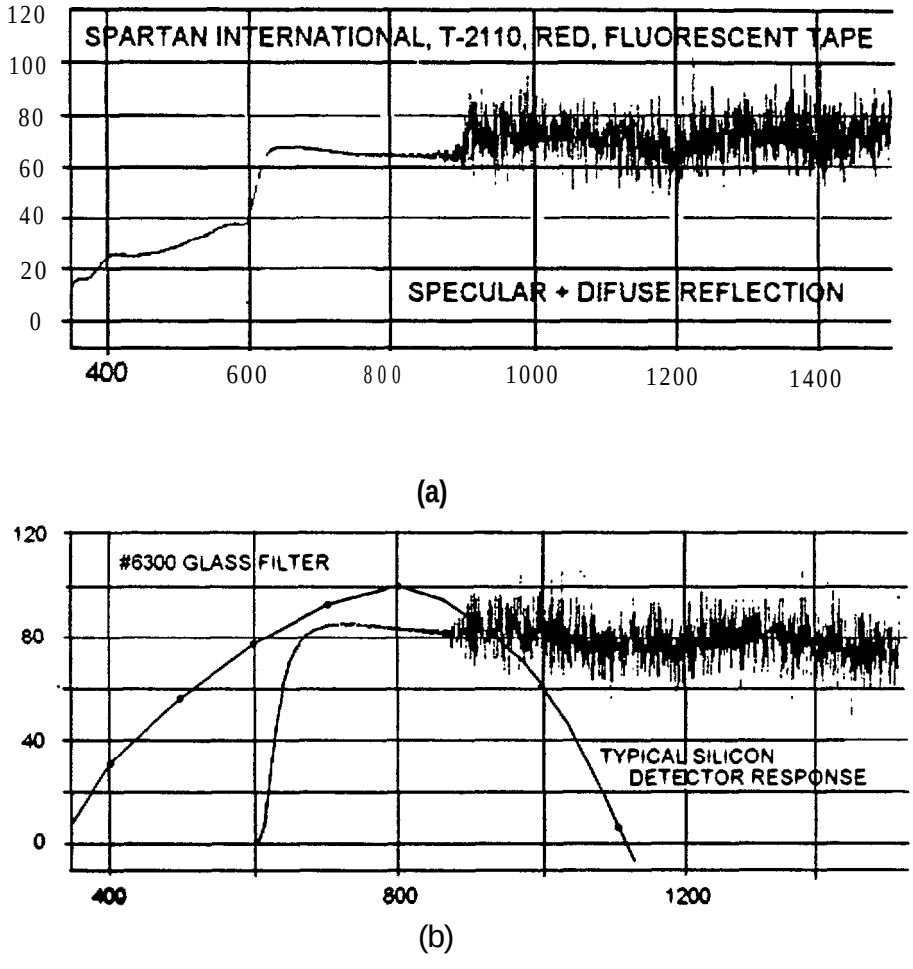


Figure 2.2-2 a) Percent reflection as a function of wavelength of red tape used to mark target car and b) Percent transmission of red filter, along with relative sensitivity of a silicon detector characteristic of CCD cameras.

# 3.0 Data Retrieval and Analysis

## 3.1 Coordinate System and Equations

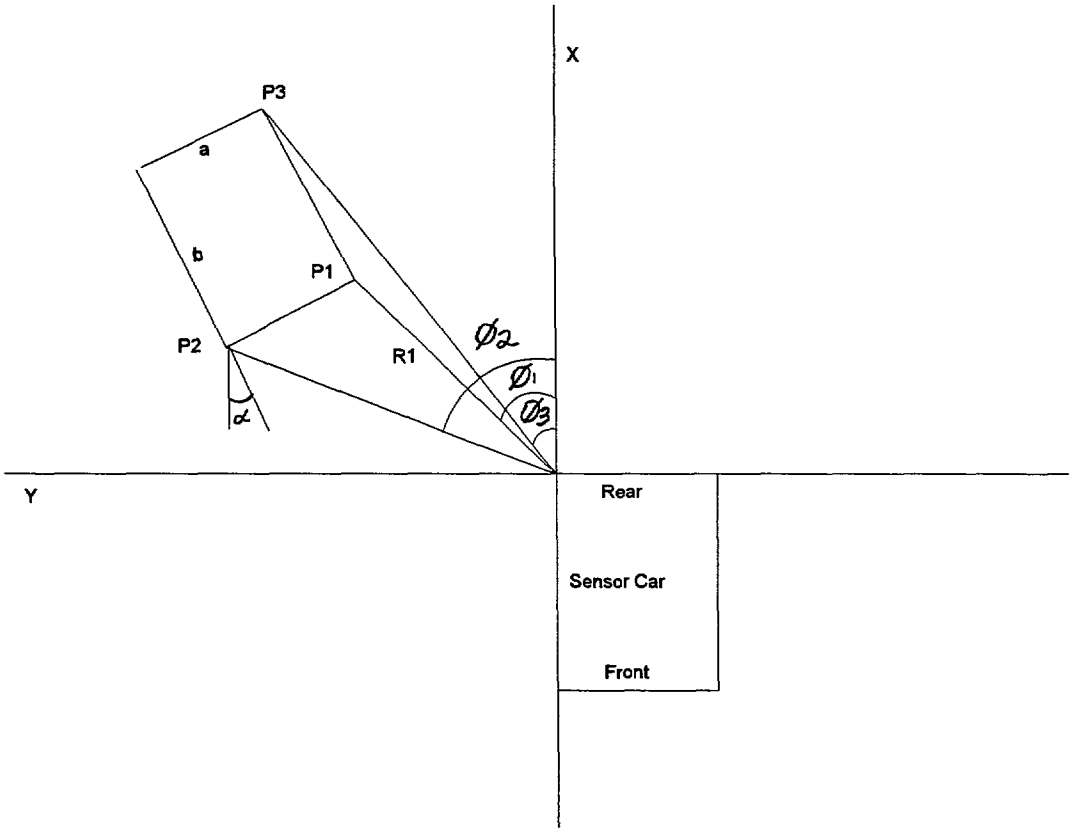


Figure 3.1-1: Coordinate System and Direction Angles

The coordinate system established and used throughout this report is that depicted in Figure 3.1-1. The origin is located at the passenger side, rear corner. The x axis is along the longitudinal direction while the y axis is in the lateral direction with respect to the sensor car. All angles are measured from the x axis.

The position of the target car can be determined if three known points on the car are in view of a single camera, or if a single point is in view of two cameras. In the latter case, if one requires the yaw of the car, then a second reference point on the target car will need to measured. The advantage of the two camera method is that non-cooperative vehicle positions can be measured.

The single camera technique relies on the fact that the target car is simply a moving rectangle with sides a and b (see Figure 3.1-1). The direction angles to points labeled $P_1$,$P_2$,$P_3$ as would be seen by a camera at the origin are angles $\phi_1$, $\phi_2$, $\phi_3$. All the quantities mentioned thus far can be measured and are therefore

known. The yaw of the vehicle with respect to the x axis is given by angle $\alpha$. The quantities $R_n$ are the magnitude of the distances to point n. The coordinates of points $P_1, P_2, P_3$ can be expressed in terms of $R_1$ ,a,b, $\phi_1$, $\phi_2$, $\phi_3$ as follows:

$P_1 = (R_1 \cos\phi_1 , R_1 \sin\phi_1 )$

$P_2 = (R_1 \cos\phi_1 - a \sin\alpha, \ R_1 \sin\phi_1 + a \cos\alpha)$

$P_3 = (R_1 \cos\phi_1 + b\cos\alpha, \ R_1 \sin\phi_1 + b \sin\alpha)$.

Using the expression $\tan\phi_n = y_n / x_n$ , and after considerable algebraic manipulation we arrive at the following equation for $R_1$:

$$R_1 = \frac{a(1+\tan\phi_2 \tan\alpha)}{(\tan\phi_2 \cos\phi_1 - \sin\phi_1)\sqrt{1+\tan\alpha^2}} \text{ where}$$

$$\tan\alpha = \frac{a(\tan\phi_3 \cos\phi_1 - \sin\phi_1) - b\tan\phi_3(\tan\phi_2 \cos\phi_1 - \sin\phi_1)}{b(\tan\phi_2 \cos\phi_1 - \sin\phi_1) - a\tan\phi_2(\tan\phi_3 \cos\phi_1 - \sin\phi_1)}.$$

In practice, there is no camera mounted at the origin of the coordinate system. The camera position can be described relative to the origin by the coordinates $X_{offset}$, $Y_{offset}$. Therefore the coordinates of $P_1$ are

$x_1 = R_1 \cos\phi_1 + X_{offset}$ and $y_1 = R_1 \cos\phi_1 + Y_{offset}$ .

For the derivation of the two camera equations refer to Figure 3.1-2. The figure depicts a single point in view of all three cameras. Not shown, but included in the analysis are small offsets in x and y ($W_{1x}$, $W_{2x}$, $T_y$) for each of the three cameras from their assumed positions at the corners of the rectangle and the center of the rear bumper. The equation of a line from the point x,y to each of the cameras can be written as follows:

W1: $y = x \tan\phi_1 - W_1 - W_{1x} \tan \phi_1$

W2: $y = x \tan\phi_2 - W_2 - W_{2x} \tan \phi_2$

T: $y = x \tan\phi_T + L \tan \phi_T + T_y$

By requiring that the x and y coordinates of the point under observation be equal in any two cameras we arrive at the following set of equations for cameras W2 and T:

$$X = \frac{W_2 + L\tan\phi_T + W_{2x}\tan\phi_2 + T_y}{\tan\phi_2 - \tan\phi_T} \text{ and}$$

$$Y = \frac{\tan\phi_T[W_2 + (L + W_{2x})\tan\phi_2] + T_y\tan\phi_2}{\tan\phi_2 - \tan\phi_T}.$$

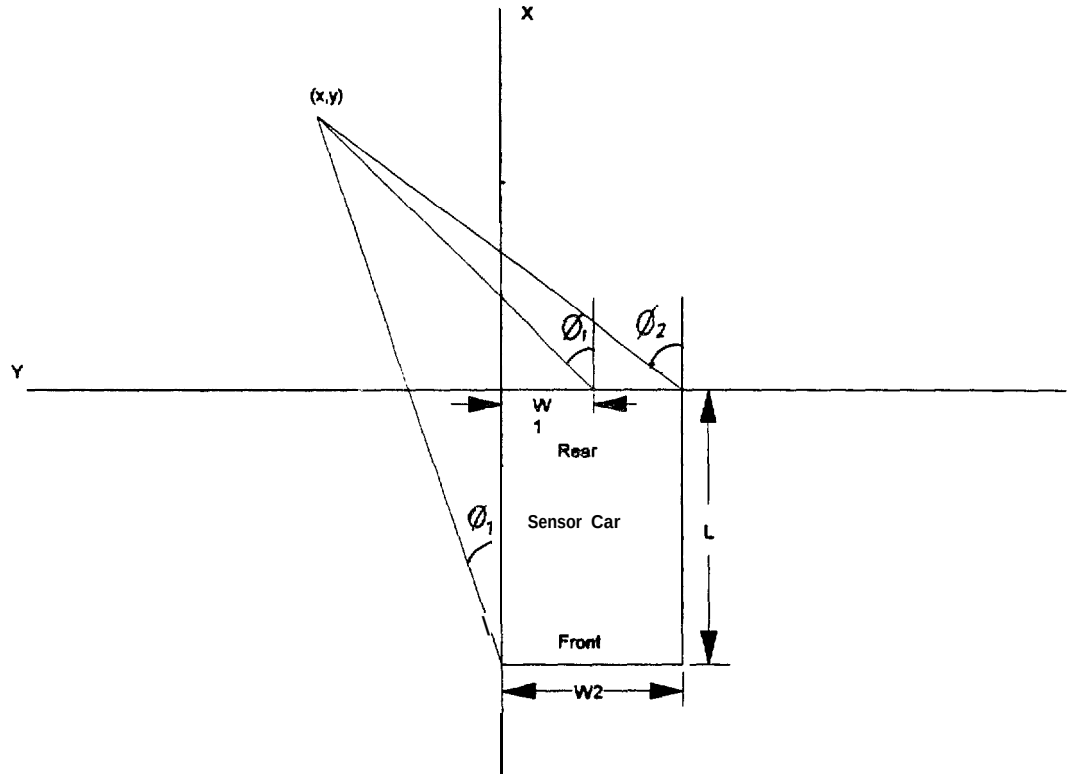


Figure 3.1-2: Dual Camera Geometry.

## 3.2 Projection and Relative Speed Calculations

Often it is necessary to determine the position of the vehicle when it is outside of the field of view of all of the cameras. This is especially the case for determining the persistence (i.e., the instant at which the warning display for a detected target is terminated) time of the sensor. For such cases it is necessary to project the vehicle forward in time using two known positions that are in the field of view. The underlying assumption in using this technique is that the vehicle speed and trajectory is unchanged during the entire time it is outside of the field of view. This is a reasonable assumption so long as the increment in time between the reference positions and the desired position is less than one second, which is almost always the case.

By evaluating the position coordinates at times $t_1$ and $t_2$ , One can calculate the angle $\beta_{traj}$ that the target vehicle trajectory makes with the x axis. From a knowledge of the position coordinates and the time elapsed between $t_1$ and $t_2$ one can calculate the velocity v. Now one has all the information needed to calculate the position coordinates at the desired time of $t_{data}$. The following simple relations apply:

$$d = v\,(t_2 - t_{data})$$
$$x_d = x_2 - d \cos \beta_{traj}$$
$$y_d = y_2 - d \sin \beta_{traj}$$

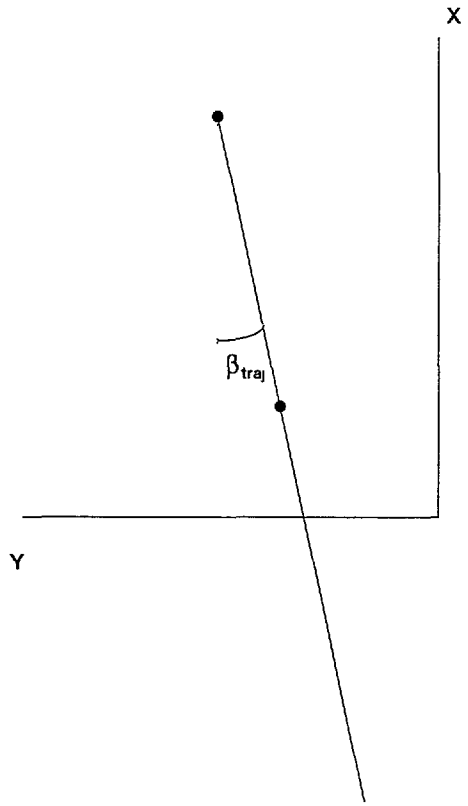


Figure 3.2-1: Projection schematic

## 3.3 Analysis Capability

Range determination is made through knowledge of the pixel location of a reference point (P1, P2, P3, or P4), the field of view of the camera, the angle at which the camera is mounted, and the physical dimensions of both the sensor car and the target car. Range determination may be made using three points from a single camera or a single point that is viewed in two different cameras. Relative speed calculations are made by using range data from two different video frames separated by a well known time interval.

Software Development

Data collection and analysis tools have been developed to quickly and efficiently analyze the large quantities of data collected. These tools are briefly described in the following sections.

Semi-Automated Data Collection: The first step was to semi-automate the data collection process. A program was developed which allows the user to record all available video data for any number of sensors systems. This includes recording the time and target vehicle reference point positions (in pixels) at which the sensor system first indicates the presence of a target as well as recording the same information for a reference frame used for the calculation of relative speed. The procedure is as follows:

For the REFERENCE frame

1) Click on the location of P2, PI, P3, P4 in Camera W1
2) Click on the location of P2, P1, P3, P4 in Camera T
3) Click on the location of P2, Pl, P3, P4 in Camera W2
4) Double-click and enter the time

For the SENSOR frame

5) Click on the location of P2, P1, P3, P4 in Camera W1
6) Click on the location of P2, P1 P3, P4 in Camera T
7) Click on the location of P2, P1 P3, P4 in Camera W2
8) Double-click and enter the time

If one or more of the reference points is not in the field of view of the camera, 0 is entered. All data is stored in an ASCII file that can be read by one of several analysis programs. To facilitate a quick understanding of the available data, a program was written to summarize the available data. An example is shown in Figure 3.3-1. The pixel values associated with the location of each of the four reference posts (P1, P2, P3, and P4) are summarized for each of the three cameras. Data for the reference frame (denoted by REF) is given as well as that of the frame in which the sensor system first reacts to the target (denoted by DATA). Reference and signal times are also given on the right hand side in units of seconds. Data in this format is presented for each pass taken with specific vehicle speeds which are indicated in the title section. This data summary format allows the user to understand the various analytical techniques that may be apptied to reduce the data.

File: C:\QB45\CASPS\DATA\

---

40 MPH

---

| Pass # 1 | P2 | Pl | P4 | P3 | | | | |
|---|---|---|---|---|---|---|---|---|
| Camera Wl | 0 | 371 | 0 | 440 | REF | | | |
| | 460 | 500 | 460 | 500 | DATA | | | |
| Camera T | 448 | 586 | 0 | 613 | REF | | | |
| | 0 | 0 | 0 | 0 | DATA | | | |
| Camera W2 | 243 | 320 | 0 | 0 | REF | Ref. | Time: | 5.07 |
| | 0 | 0 | 0 | 0 | DATA | Data. | Time: | 56.17 |
| Pass # 2 | | | | | | | | |
| Camera Wl | 0 | 369 | 0 | 445 | REF | | | |
| | 464 | 507 | 463 | 508 | DATA | | | |
| Camera T | 448 | 593 | 0 | 620 | REF | | | |
| | 0 | 0 | 0 | 0 | DATA | | | |
| Camera W2 | 235 | 312 | 0 | 0 | REF | Ref. | Time: | 47.93 |
| | 0 | 0 | 0 | 0 | DATA | Data. | Time: | 42.03 |
| Pass # 3 | | | | | | | | |
| Camera Wl | 0 | 348 | 0 | 414 | REF | | | |
| | 437 | 478 | 0 | 483 | DATA | | | |
| Camera T | 403 | 521 | 0 | 556 | REF | | | |
| | 583 | 0 | 0 | 0 | DATA | | | |
| Camera W2 | 252 | 309 | 0 | 0 | REF | Ref. | Time: | 39.00 |
| | 0 | 0 | 0 | 0 | DATA | Data. | Time: | 36.47 |
| Pass # 4 | | | | | | | | |
| Camera Wl | 0 | 348 | 0 | 414 | REF | | | |
| | 425 | 462 | 0 | 469 | DATA | | | |
| Camera T | 403 | 520 | 0 | 556 | REF | | | |
| | 557 | 0 | 0 | 0 | DATA | | | |
| Camera W2 | 250 | 308 | 0 | 0 | REF | Ref. | Time: | 4.70 |
| | 0 | 0 | 0 | 0 | DATA | Data. | Time: | 3.03 |
| Pass # 5 | | | | | | | | |
| Camera Wl | 0 | 355 | 0 | 414 | REF | | | |
| | 421 | 457 | 0 | 468 | DATA | | | |
| Camera T | 408 | 516 | 0 | 553 | REF | | | |
| | 548 | 616 | 0 | 0 | DATA | | | |
| Camera W2 | 258 | 313 | 0 | 0 | REF | Ref. | Time: | 5.97 |
| | 0 | 0 | 0 | 0 | DATA | Data. | Time: | 4.43 |
| Pass # 6 | | | | | | | | |
| Camera Wl | 0 | 355 | 0 | 420 | REF | | | |
| | 435 | 472 | 0 | 479 | DATA | | | |
| Camera T | 415 | 532 | 0 | 567 | REF | | | |
| | 577 | 0 | 0 | 0 | DATA | | | |
| Camera W2 | 253 | 313 | 0 | 0 | REF | Ref. | Time: | 57.97 |
| | 0 | 0 | 0 | 0 | DATA | Data. | Time: | 56.40 |

Figure 3.3-1: Sample Data Summary Sheet

Data Reduction Methods: Once the data has been collected, the information is fed into a data analysis program. This program has the capability of using one of six techniques to analyze the data. These are:

1) Video data from a single point viewed by cameras W1 and T
2) Video data from a single point viewed by cameras W2 and T
3) Video data from a single point viewed by cameras W1 and W2
4) Video data from three points viewed by camera W1
5) Video data from three points viewed by camera W2
6) Video data from three points viewed by camera T

The equations used for these analyses has been presented in Sections 3.1 and 3.2. The user is allowed to choose the method of analysis. In cases where not enough applicable data is available over the entire data set, an alternate technique is automatically applied. The output of this analysis program is a table of X and Y positions as well as the calculated relative speed between the target and the sensor vehicle. An example output is shown in Figure 3.3-2. The heading contains a description of the type of test performed, the cameras used in the analysis, the reference point taken on the target vehicle, and the camera mounting angles in degrees. The number in parenthesis indicates the pointing angle correction factor determined from calibration measurements. The position data is presented in an X, Y format and is given in units of feet. The vehicle speed calculated from the video data is given in MPH. Column four lists the pass number and column five describes the camera technique used to analyze the data.

Parallel Delay Time Tests

Wl,T or W2,T or three points from T (projection)
Ref. Pl

Wl = 33.5 (1.000)
W2 = 70.0 (1.050)
T = 10.0 (1.000)

| X | Y | speed | | |
|---|---|---|---|---|
| 4.6100 | 1.5646 | 1.2071 | 1 | Wl,T |
| 4.7322 | 1.4211 | 1.0690 | 2 | Wl,T |
| 4.9186 | 1.4010 | 1.5158 | 3 | W1,T |
| 5.0955 | 2.0589 | 1.2688 | 4 | W1,T |
| 5.1017 | 2.4938 | 1.4583 | 5 | W1,T |
| 5.2213 | 2.3818 | 3.0968 | 1 | Wl,T |
| 4.7741 | 1.9092 | 3.8064 | 2 | Wl,T |
| 5.0509 | 2.6435 | 2.9722 | 3 | W1,T |
| 4.8903 | 2.3785 | 3.8862 | 4 | W1,T |
| 5.0887 | 2.0893 | 3.4654 | 5 | W1,T |
| 4.5781 | 2.4971 | 7.4881 | 1 | Wl,T |
| 4.0797 | 2.7366 | 7.6670 | 2 | W1,T |
| 4.4079 | 2.7486 | 7.2248 | 3 | W1,T |
| 4.5948 | 2.5596 | 5.4411 | 4 | W1,T |
| 4.5306 | 2.1600 | 7.8145 | 5 | Wl,T |
| 5.0395 | 2.4250 | 10.3551 | 1 | W1,T |
| 4.4925 | 2.7290 | 11.8697 | 2 | Wl,T |
| 5.3774 | 2.7133 | 11.6962 | 3 | Wl,T |
| 4.4925 | 2.7290 | 12.2462 | 4 | W1,T |
| 4.4619 | 2.9636 | 14.2451 | 5 | T Projection |
| 4.8074 | 2.7377 | 19.2793 | 1 | W1,T |
| 2.0836 | 3.1660 | 25.3894 | 2 | T Projection |
| 4.1257 | 3.0399 | 21.9978 | 3 | Wl,T |
| 3.1731 | 2.8459 | 21.9978 | 4 | W2,T |
| 3.1386 | 2.5034 | 21.6820 | 5 | Wl,T |
| 3.7460 | 3.8678 | 31.0702 | 1 | Wl,T |
| 3.5068 | 3.2395 | 28.0313 | 2 | W1,T |
| 1.7070 | 3.5270 | 35.1280 | 3 | Projection |
| 3.2239 | 2.7115 | 29.0080 | 4 | Wl,T |
| 3.2354 | 3.3388 | 29.2850 | 5 | W1,T |
| 3.5660 | 2.8725 | 38.2069 | 1 | Wl,T |
| 1.6270 | 3.3552 | 0.2744 | 2 | W2,T |
| 3.8242 | 2.9085 | 35.2625 | 3 | W1,T |
| 4.0216 | 2.7882 | 35.7810 | 4 | W1,T |
| 3.3720 | 2.7312 | 38.1456 | 5 | Wl,T |

Figure 3.3-2: Sample Program Output

## 4.0 Calibration and Error Analysis

The interpretation of the system performance relies almost exclusively on video data. In particular it relies on the determination of the position of the target and other vehicles from the video data. Considerable effort has gone into the understanding of the limits of this technique, the errors associated with the measurements and the means to improve the overall accuracy.

### 4.1 Camera Calibration

The cameras were calibrated in terms of degrees per pixel by holding a fixed length object at varying distances away from the camera and recording the scene. The object was held normal to the axis of the camera and centered in the field of view. The object chosen was 1.65m in length. At any given distance d it subtends an angle corresponding to 2 arctan (1.65/2d) degrees. If we plot the pixel width of the object versus the angle subtended we get Figure 4.1-1 for the wide angle camera. Note that the deviation from a straight line is extremely small and that the line passes almost through zero. The resultant calibration for the wide angle camera is 213 degrees per pixel.

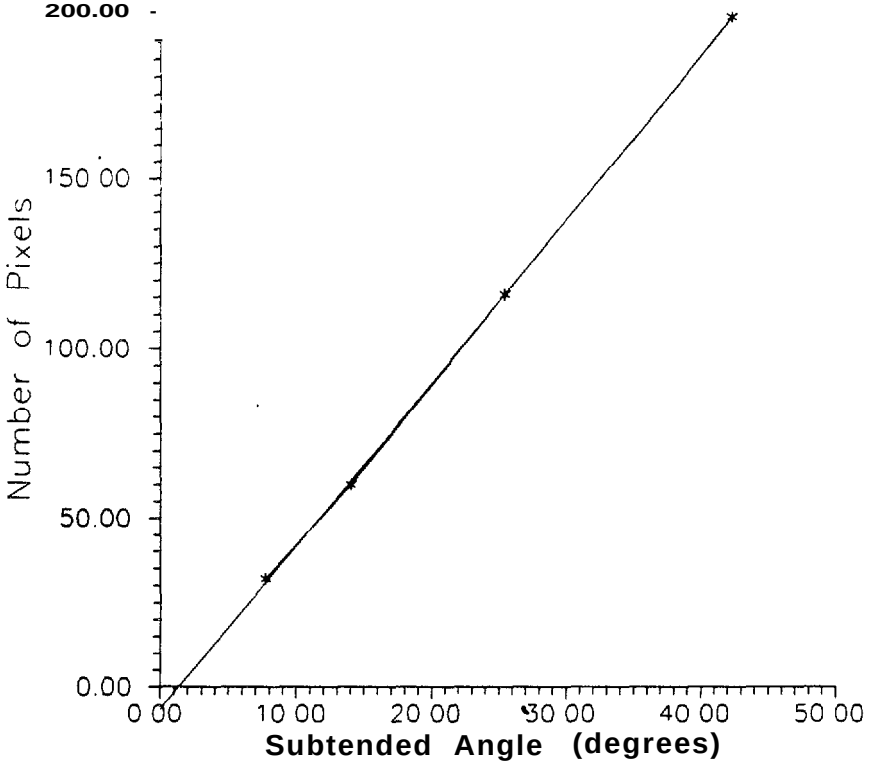


**Figure 4.1-1:** Pixel Width as a Function of Subtended Angle for Wide Angle Camera

The telephoto camera was calibrated for two different length objects at two different points. The calibration for the telephoto lens is 0.0901 +/-.0008 degrees per pixel.

A second aspect of camera calibration involves the determination of the'amount of distortion introduced into the scene by the camera lens. Typically this kind of distortion is most pronounced around the edges of the scene, and more pronounced in the wide angle cameras than in the telephoto. This effect was measured by placing a grid of one inch squares in front of the camera. By measuring the deviation from the mean of the width of the squares as recorded on video tape we have a measure of the distortion. The telephoto camera shows no measurable distortion. The wide angle cameras show small levels of distortion (on the order of 10%) around the outer 5% of the screen. Since most the data was acquired with the target vehicles away from the edges of the screen, this effect had negligible influence on the data.

## 4.2 Camera Pointing Angles

Any determination of distances depends crucially on the camera pointing angle. The camera pointing'angle is defined as the angle the axis of the camera makes with the longitudinal axis (x) of the sensor vehicle. In the case of the telephoto camera and W2 the task is made somewhat simpler by the fact that certain parts of the sensor car itself are in the field of view. By measuring the lateral and longitudinal distances from the cameras to these fixed points, the camera pointing angle can be deduced. Figure 4.2-1 shows the view from the telephoto camera. In the upper right portion of the video image is a sensor mounting bracket attached to the vehicle. The adjacent diagram gives the relevant dimensions so that the camera pointing angle can be calculated. Similarly Figure 4.2-2 shows the view from W2. In its field of view are also mounting brackets that serve as a fixed reference point. The adjacent diagram gives the relevant dimensions so that the camera pointing angle can be calculated.

The only camera pointing angle to be still determined is W1 . Normally W1 is pointed such that there is no fixed reference point in its field of view. Although the pointing angle is measured this can vary by as much as a few degrees. This leads to an unacceptable error in position calculation. We have found that a fixed reference introduced into the field of view not mounted on the sensor car is useful for such calibration. In particular if we position the target car at a known distance away from the sensor car, such that the coordinates of its reference posts P1 to P4 are known, then we can use either the one camera or the two camera method of verifying the pointing angle of W1 . This is done by numerically adjusting the pointing angle until the calculated value of P1 for example, matches the measured value.

Figure 4.2-1: Calibration of Telephoto Camera Mounting Angle

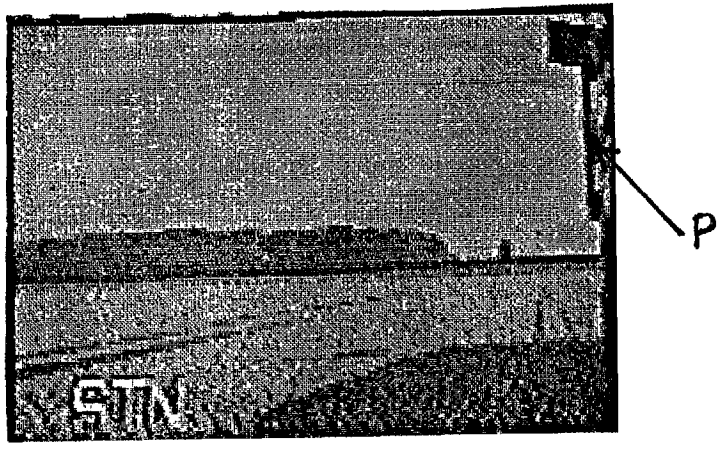


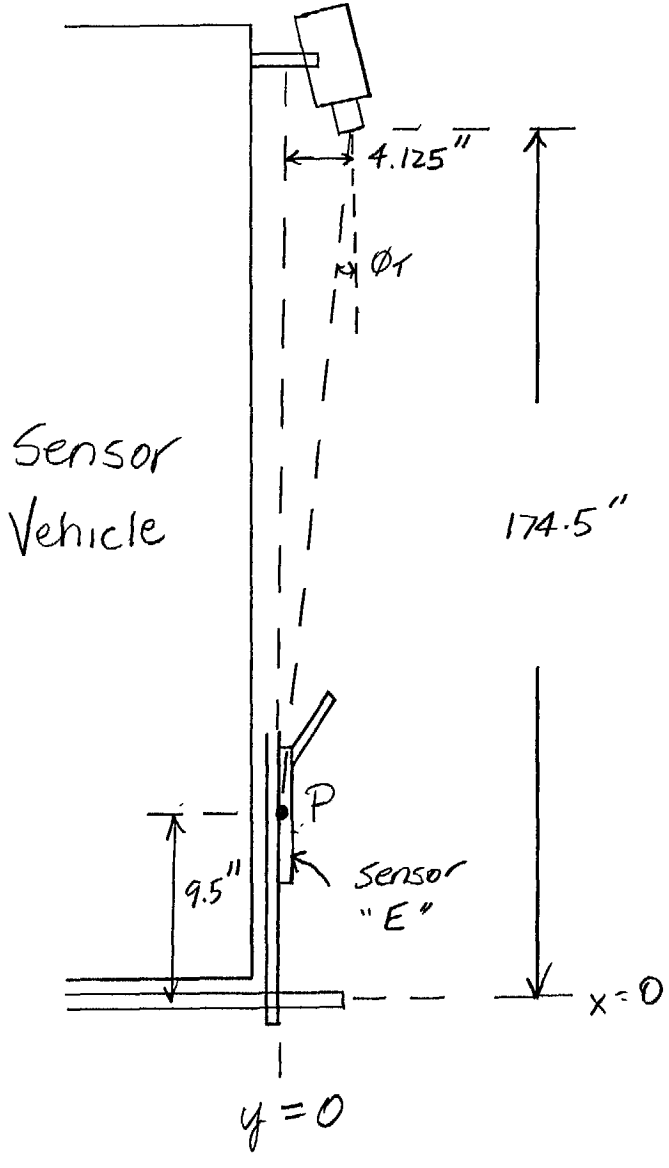

Figure 4.2-2: Calibration of Wide #2 Camera Mounting Angle

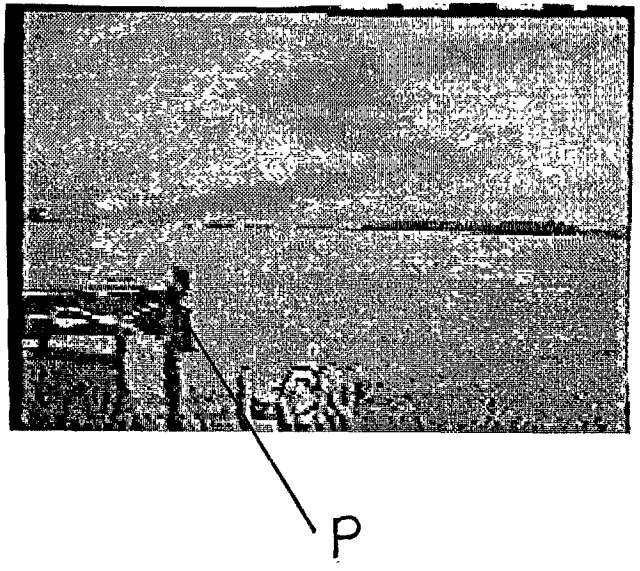


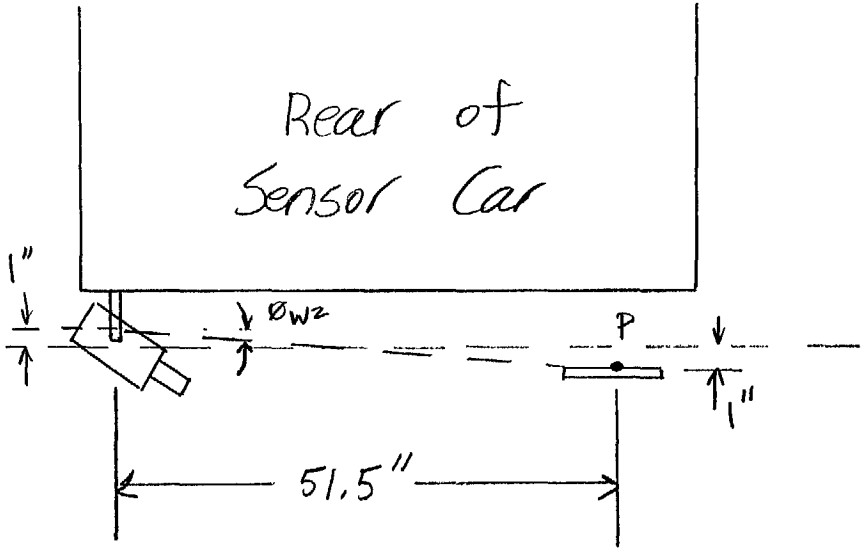

## 4.3 Accuracy

Over the course of the testing a number of techniques to measure position from the video data have evolved. These are. the three point technique from any of the three cameras, and a combination of any two of the three cameras fixed on a single point common to both cameras. As mentioned previously the former technique requires the use of a delineated target car, while the latter is useful for establishing the position of non-cooperative vehicles. In order to characterize the accuracy of these techniques we have compared these measurements to known standards. We have used two such standards. The first is the knowledge that the distance between points P1 and P2 on the target car is fixed. The second is a comparison with the target car velocity as measured by the laser rangefinder. We have found that there is such a long delay between the measurement and the RS232 output of that information intrinsic to the rangefinder that the distance measurement might be inaccurate. The velocity of a car moving a constant speed is a fairly good standard.

Figure 4.3-1 shows the approach of the target car in a series of three frames. The top photo is W1 and the bottom is the telephoto camera. Using the two camera technique one can calculate the coordinates of P1 and P2 and then the distance between them. Going from (a) to (c) the calculated distances between P1 and P2 are 1.73m, 1.74m and 1.71 m. This is to be compared to the measured distance of 1.70m. Here we see that the calculated is within 2% of the measured distance.

Figure 4.3-2 shows the laser rangefinder output as a function of time. The laser is tracking the approaching target vehicle. The slight variations in the data points are most likely due to jitter in the handling of the rangefinder. A best fit line through those points yields a velocity of 9.97m/sec. Figure 4.3-3 shows the same plot of distance versus time as calculated using three points in Wl and T and a single point in W 1 and T. The curve for WI, T is quite removed from the other two and does not exhibit the constant velocity as seen in the rangefinder. The curve from the telephoto is more nearly a straight line. The average velocity calculated from the slopes are 9.52 m/sec for T and 10.77 m/sec for W1 At large distances the telephoto is the preferred camera, and the one that was used primarily in our analysis. Using the relation delx = delv * del t where del x is the positional uncertainty, delv the velocity uncertainty and delt is the time interval, a velocity uncertainty of .45 m/sec translates to a positional uncertainty of .9 m. This is applicable at distances on the order of 20 - 30m.

At close in distances Figure 4.3-4 shows all the applicable techniques for calculating the distances and the derived velocities. The two camera technique using W1 and W2, and W 1 and T yield the greatest deviation from the.laser data. This is understandable because they have the shortest baseline for determining

Figure 4.3-1: Calibration of Cameras Wide #2 and Telephoto

(a) (b) (c)

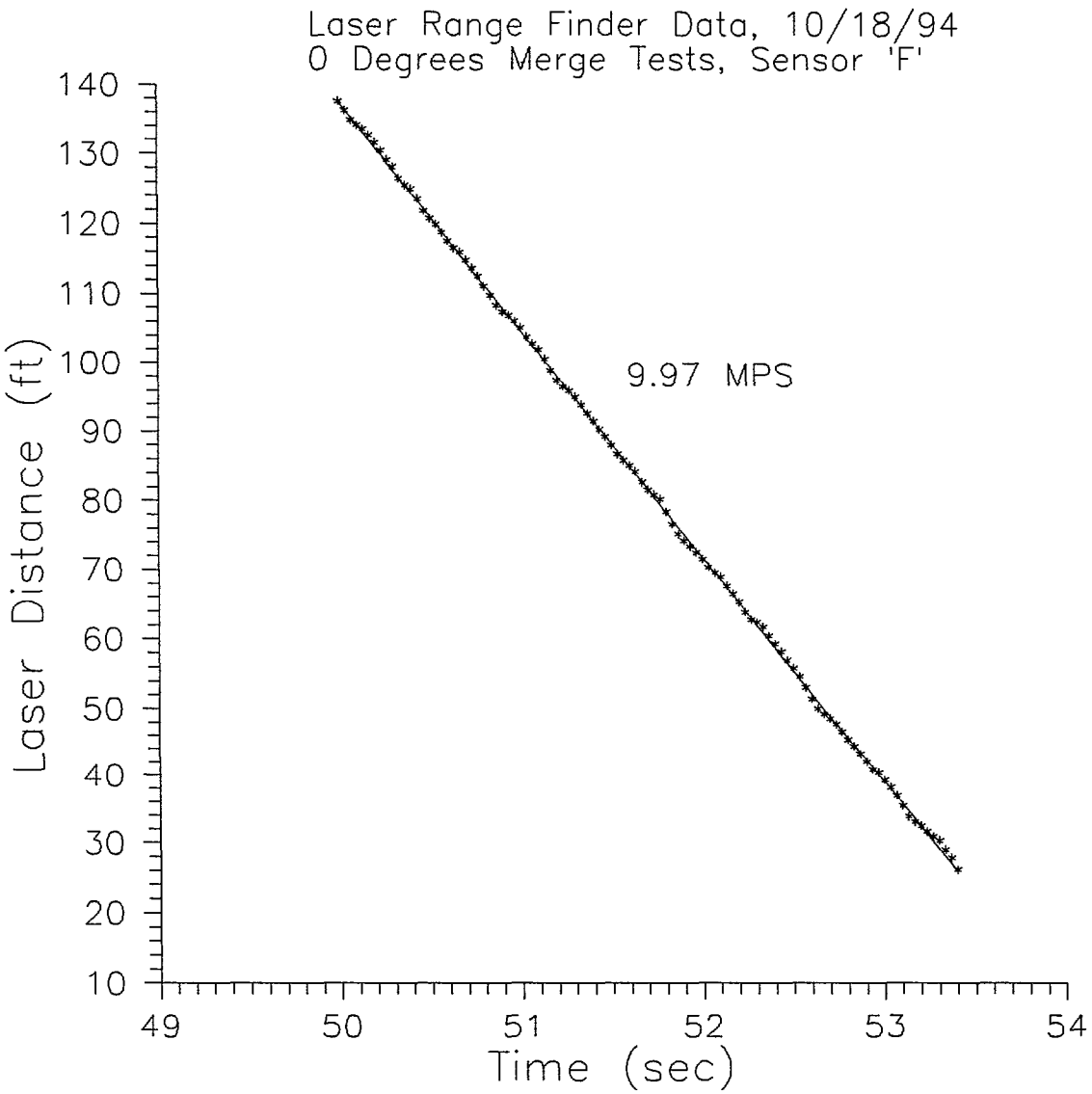


**Figure 4.3-2: Laser Range Finder Data - Verification of Approaching Vehicle Speed**

Figure 4.3-3: Comparison of Calculated Vehicle Speeds

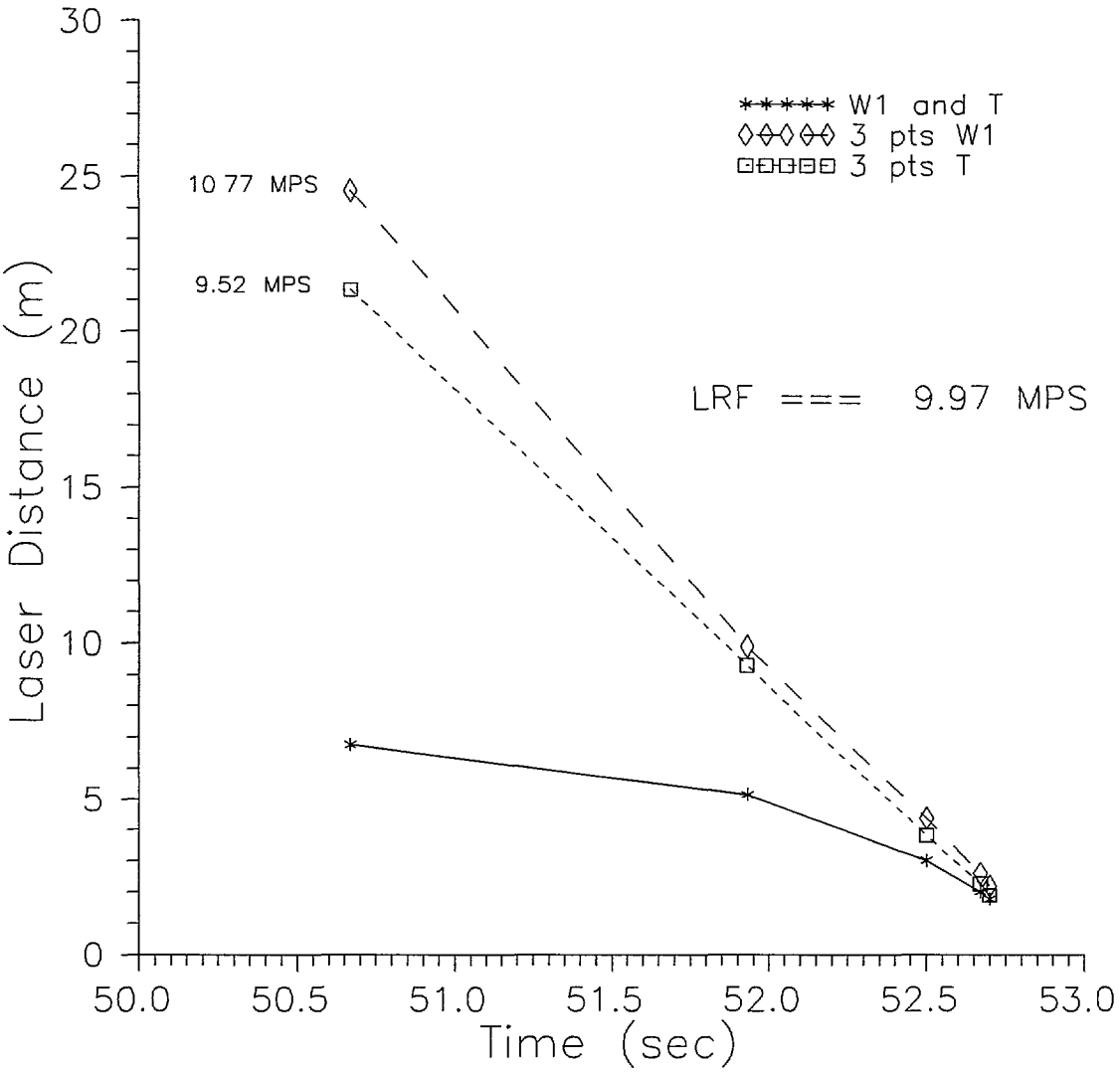

Figure 4.3-4: Comparison of Calculated Vehicle Speeds at Close Range

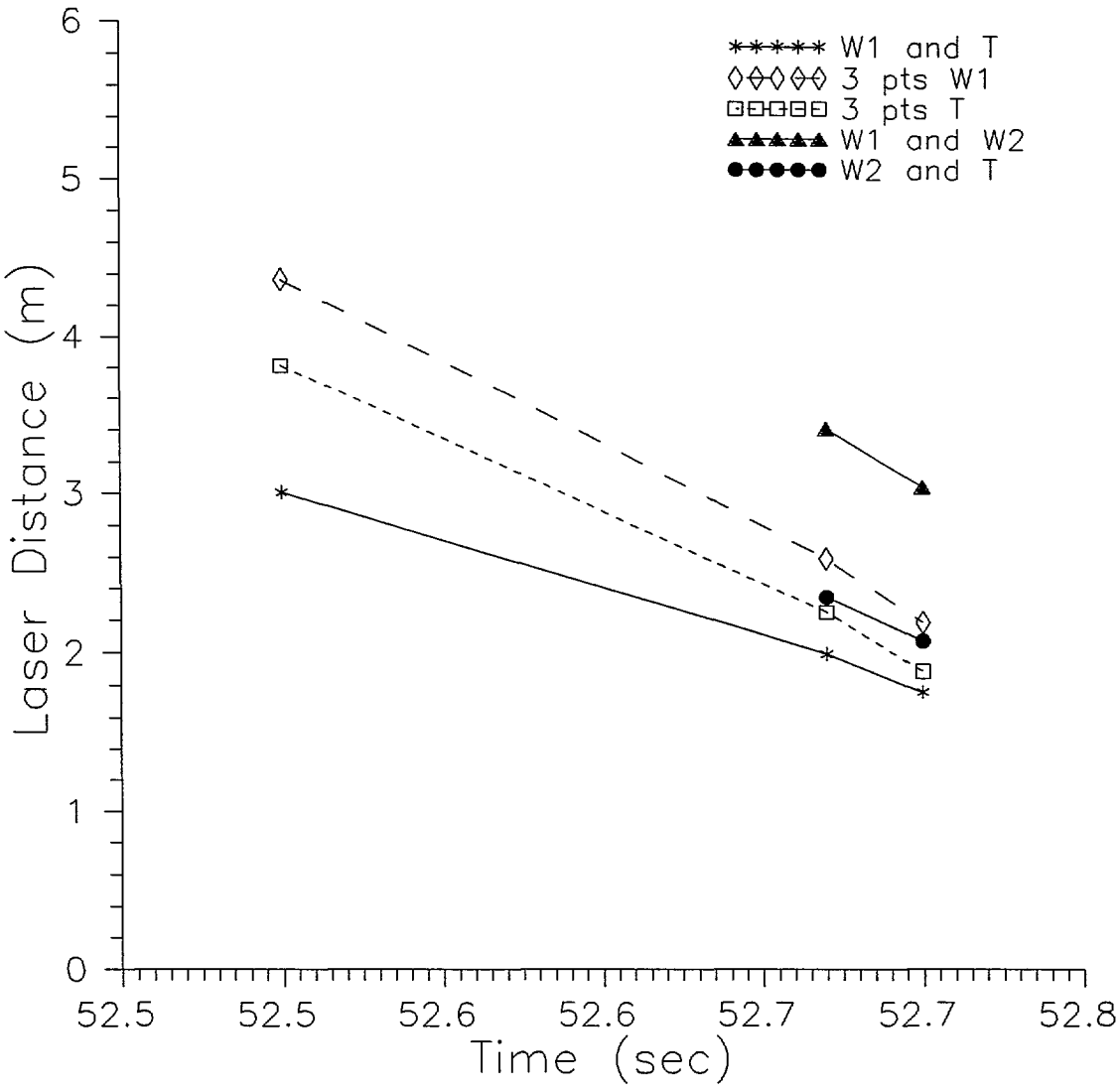

distance in the x direction. This will be further elaborated in the following section on error propagation. The other three techniques give fairly reasonable results that yield a positional uncertainty of .6m for distances below 5m.

### 4.4 Error Propagation

Understanding the errors inherent in the three point technique is fairly straightforward. The quantity with the greatest leverage is the uncertainty in the pointing angle. This is also the case for the two camera technique. Since the calculation of distance depends most strongly on the difference between the tangents of angles, uncertainty in the pointing angle is translated to uncertainty in arc length. Therefore the positional uncertainty is approximately del theta %. For an uncertainty of 2 degrees this implies an accuracy of less than 4%. This is reasonably consistent with our observations.

For the two camera technique we will do a more formal error propagation analysis. For any function

$$f = f(x_1 \ldots x_n)$$

the uncertainty in f can be expressed as a function of the uncertainties of the measured values x1....xn by the following equation

$$\Delta f = \left(\left(\frac{\partial f}{\partial x_1}\right)^2 (\Delta x_1)^2 + \ldots + \left(\frac{\partial f}{\partial x_n}\right)^2 (\Delta x_n)^2\right)^{1/2}$$

The cameras W and T the uncertainties in x and y as a function of the pointing angles are

$$\Delta x = \frac{\Delta\phi}{(\tan\phi_W - \tan\phi_T)^2}\left[\frac{(W + L\tan\phi_T)^2}{\cos^4\phi_W} + \frac{1}{\cos^4\phi_T}\left(W + L(\tan\phi_W - \tan\phi_T) - \frac{L\tan\phi_T}{(\tan\phi_W - \tan\phi_T)^2}\right)^2\right]^{1/2}$$

$$\Delta y = \frac{\Delta\phi}{(\tan\phi_W - \tan\phi_T)^2}\left[\frac{\tan^2\phi_T(L\tan\phi_T + W)^2}{\cos^4\phi_W} + \frac{\tan^2\phi_{W1}(L\tan\phi_W + W)^2}{\cos^4\phi_T}\right]^{1/2}$$

The dependence on pointing angle is the strongest functional dependence. The dependence on the exact coordinates of the cameras is much weaker. Note that both delx and del y depend on W and L. These values are the baseline of what is essentially a triangulation measurement. Figures 4.4-1 and 4.4-2 show the relative error in x and y and a function of position for pointing uncertainties of 1 degree. Note that the relative error in x is much greater than that of y. This is due to the fact that the baseline for measurements in y is the length of the car while that for x is the width. Since the length is much greater than the width, the accuracy is commensurately greater. Note also that the uncertainty, Δx/x, can rise to values

greater than 1 for distances greater than 20m. Discussion in the previous section indicated much greater precision. The resolution of this seeming contradiction lies in the fact that the effective uncertainty in the pointing angle must be much smaller than one degree due to the fact that the angle is calibrated by positioning the target car at a known coordinate before every run.

Figure 4.4-1: Relative Error in X for Cameras Wide #2 and Telephoto

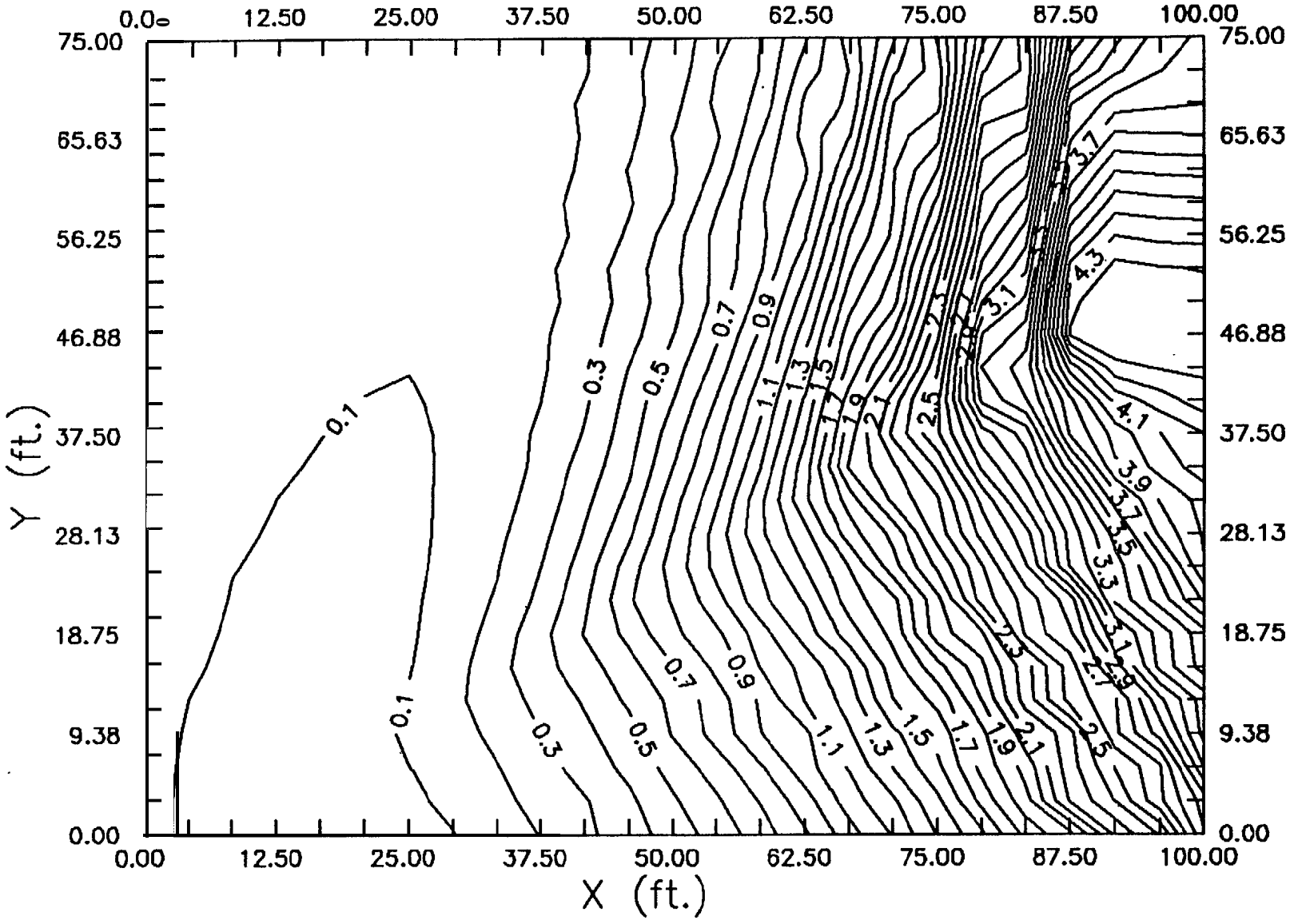

Figure 4.4-2: Relative Error in Y for Cameras Wide #2 and Telephoto

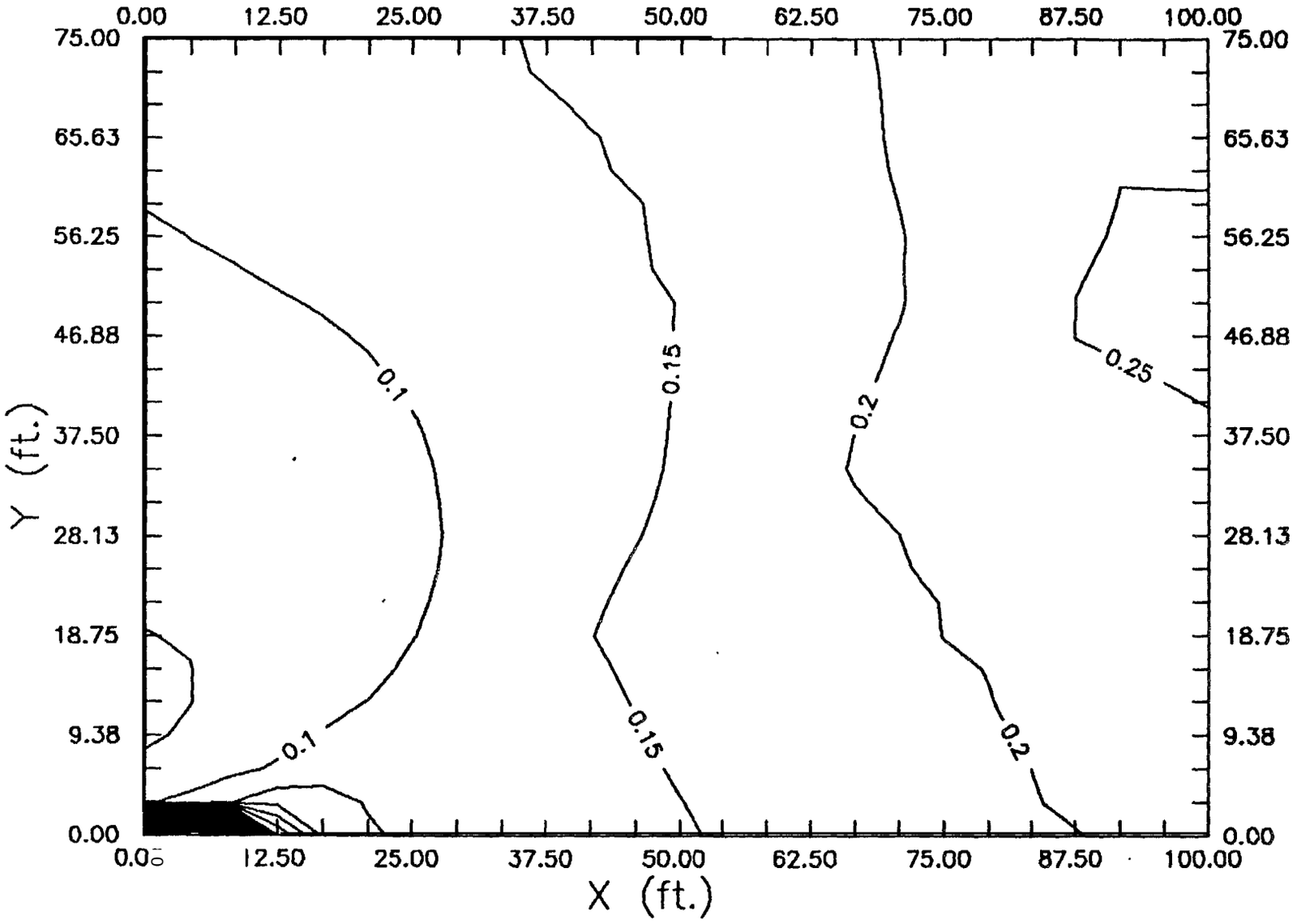

## 5.0 Test Methodology

Complete Collision Avoidance Systems (CAS) systems were tested, including components and subsystems for sensing, data processing and interfacing with the driver. Testing included static tests to verify basic operation of the systems, followed by vehicle tests on the test track and finally by road tests to obtain basic operational and performance data. The purpose of this testing was to determine limits and capabilities of the hardware, and to assist in formulating performance requirements relative to IVHS safety needs. The tests have been designed to encompass as many performance variables and factors as could be accommodated within budget and schedule constraints. The test results shall be used to modify, where necessary, the mathematical models to be developed in subsequent phases of this project and as input to the effectiveness estimates of collision avoidance countermeasures.

The manner in which these tests were carried out was essentially analogous to black box testing. No attempt was made to get inside the sensor systems. All of the performance variables were inferred using a stimulus/response methodology. As such, every attempt was made in the dynamic portion of the tests to simulate real world situations in a controlled environment so that accurate measurements could be made of the sensor system performance.

The first part of these tests were the static tests. These tests were designed to collect basic information about the field of view of the sensor for various targets. These targets include a car, motorcycle and a person. In addition two foam targets were constructed which could be covered with varying materials. These foam targets were concave outward and measured .3 m and .6 m square. They were originally designed to represent a real world target, such as a person or car. In practice, it was found that calibration was unreliable as a direct result of our treating the'system as a black box and that there was no adequate substitute for a real world target. In many cases it was found that the system invoked an arbitrary cutoff in range so that the idea of comparing the cross section of two objects by increasing the range to target and observing the loss of detection could not be used. Most of the sensor systems were of a relatively short range and therefore it was convenient to use the smaller foam target to obtain resolution on the order of the target size (.3m). It should be noted that all the sensors have what might be called a "soft" edge. This refers to the fact that the boundaries of the field of view were observed to vary .3 - .6m. For purposes of these tests we invoked a '50% rule", in that the sensor system had to give a positive response for greater than 50% of the time averaged over approximately one minute. Again this is a direct result of using a small target to define the sensor system boundaries. This was generally not an issue when the target was a car, which is a large and distributed target. ,

The second and most extensive part of the tests were the dynamic tests. Under this category are the delay time tests, and lane change and baking maneuver simulation. The delay time tests for the lane change systems were done in two orthogonal directions to observe whether there was any velocity dependence in the detection algorithm. All the other dynamic tests were performed with the delineated target car, and were meant to be closely related to real world driving situations.

The final part of the testing involved a road test. The purpose of the road test was to immerse the system in actual driving conditions to get a sense of how it would perform. In particular it served as a point of comparison to our simulated maneuvers to validate our methodology.

The rest of this chapter provides a detailed description of the tests.

## 5.1 Static Tests

The static tests were performed with a number of different targets. The following targets were used: .3m x .3m block of foam, .6m x .6m block of foam, human, motorcycle (referenced to the point where the front tire meets the road), and a car (referenced to P1). The foam targets were covered with aluminum foil to maximize the cross section. For infrared sensors, the foam blocks were covered in both white and black material.

A grid has been painted on the parking lot surface. The sensor car was positioned so that right rear corner of the car was at the origin (Figure 5.1-1 ). The targets were positioned in a systematic way around the grid and the positive detections recorded.

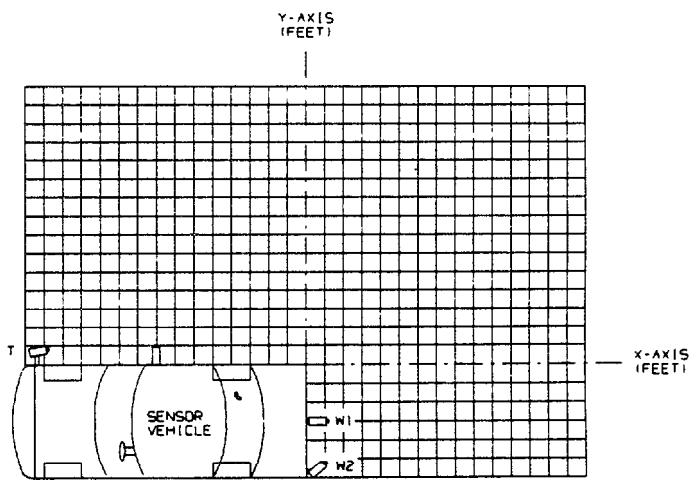


**Figure 5.1-1.** Arrangement for Static Tests of Lane Change Sensor

Data collection for the vehicle targets (motorcycle and car) was achieved by driving the vehicle along a grid line running parallel to the sensor vehicle. The target vehicle was stopped at specific longitudinal positions separated by 0.6m to record the system response. Typically, these measurements were initiated on the 0.6m grid line and continued laterally in steps of 0.6m until no signal was observed. Both of these targets present larger cross sections to the sensor system. Particularly with the automobile target, the measured static pattern as referenced to the front driver's side of the vehicle appears to cover a significantly larger spatial extent than that measured for the point source targets. As the vehicle passes through the detection zone, the system first detects the front of the vehicle, then the middle, and finally the rear of the vehicle. As the rear of the vehicle crosses the boundary of the detection zone, the front of the vehicle to which the pattern has been referenced is 4m farther forward. This gives the appearance of a larger detection zone in the longitudinal direction.

For static tests of backing systems, the sensor car was positioned as shown in Figure 5.1-2 and the test repeated as in the lane change case.

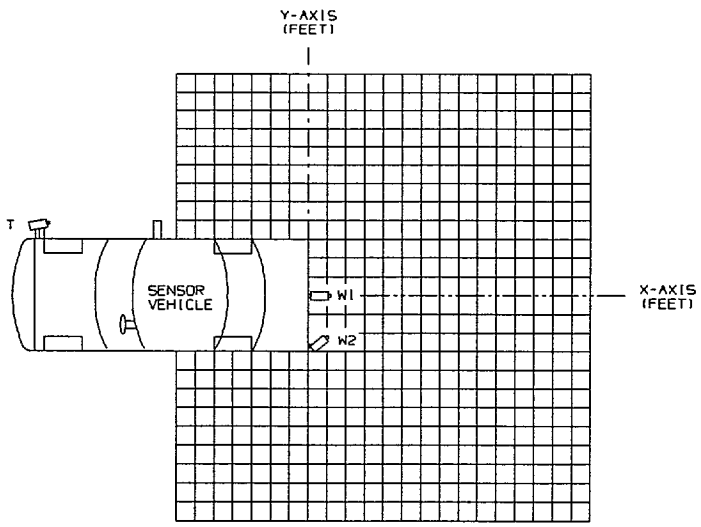


Figure 5.1-2. Arrangement for Static Tests of Backing Systems

When using the .3m square block and the human as targets, the position increments were .3m. For all the other targets the position increments were .6m.

The vertical extent of the sensor pattern was also measured. This was done by tying a non-conducting string to the .3m square target. With one person at each end of the string and out of the field of view of the sensor, the target was moved vertically to find the low and high thresholds of the sensor system detection indication. The distance to the target and the vertical positions of the onset of detection were recorded.

## 5.2 Dynamic Tests

### 5.2.1 Delay Time Tests

Delay time tests were conducted with the target car moving both parallel and perpendicular to the longitudinal axis of the sensor car. The reason for this was to determine whether there was a velocity dependence to the sensor system detection indication. The underlying principle behind this test was that if the car moves into the sensor's field of view at gradually increasing speeds, the point at which the system gives a positive indication will also move gradually across the field of view. These positions as well as the car's velocity can be measured from the time tagged video. By plotting the position when the system turns on against the velocity one can deduce the delay time. In addition, from any change in slope at the higher velocities, one should be able to determine whether the sensor system has a velocity dependence built into its algorithm.

For the perpendicular delay time tests, the cars were arranged as shown in Figure 5.2-1.

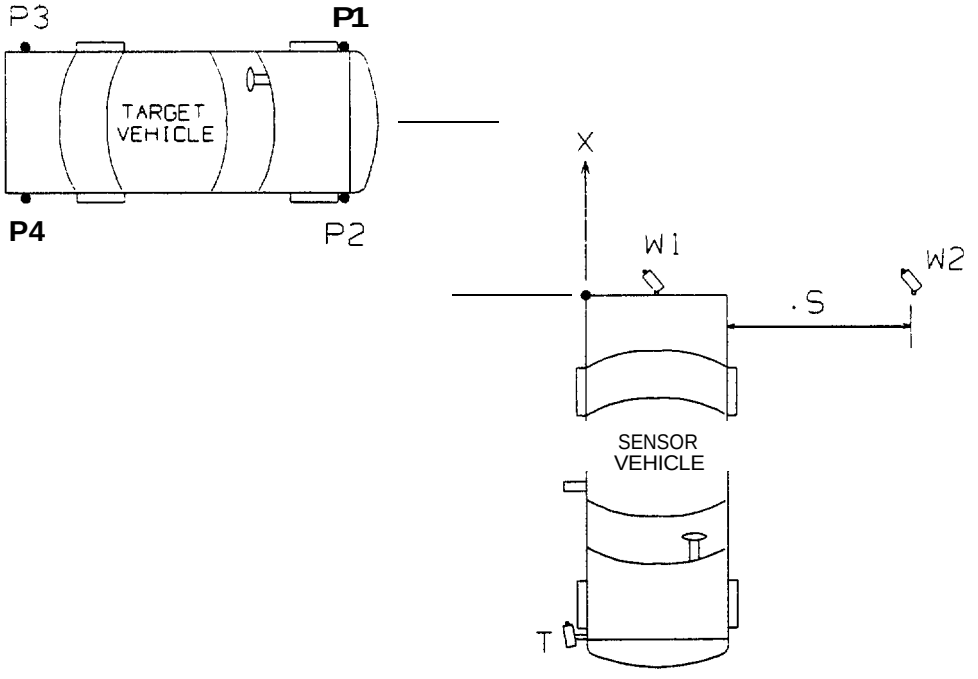


Figure 5.2-1. Perpendicular Delay Time Arrangement

Note that the W2 camera has been removed from its mount on the sensor car. For slow systems at high target car speeds the onset time will be late so that it is necessary for one of the cameras to be moved further out. The camera pointing angles were adjusted to be T = $10^{o}$ W1 = $60^{o}$ and W2 = $50^{o}$. Before the start of

these tests a calibration picture must be taken. This was accomplished by positioning the target car in the field of view of all three cameras. The position of the P2 post with respect to the origin was measured as well as the distance S as labeled in Figure 5.2-1. This scene is recorded on videotape for off-line calibration of the camera pointing angles.

For the actual test, the target car was driven along the indicated direction at velocities ranging from 1.6 to 48.3 KPH in 8 KPH increments. Five passes were made at each speed keeping the target car at least 1 meter from the sensor car.

For the parallel delay time test, the test arrangement is as shown in Figure 5.2-2. This test was identical to the perpendicular tests with the following exceptions. First, camera W2 need not be removed from the car. Second, these tests need not (and indeed cannot) be performed with the backing sensor systems. For these tests change the W2 angle to 90". Take a calibration picture as in the perpendicular case and then perform the same target car passes.

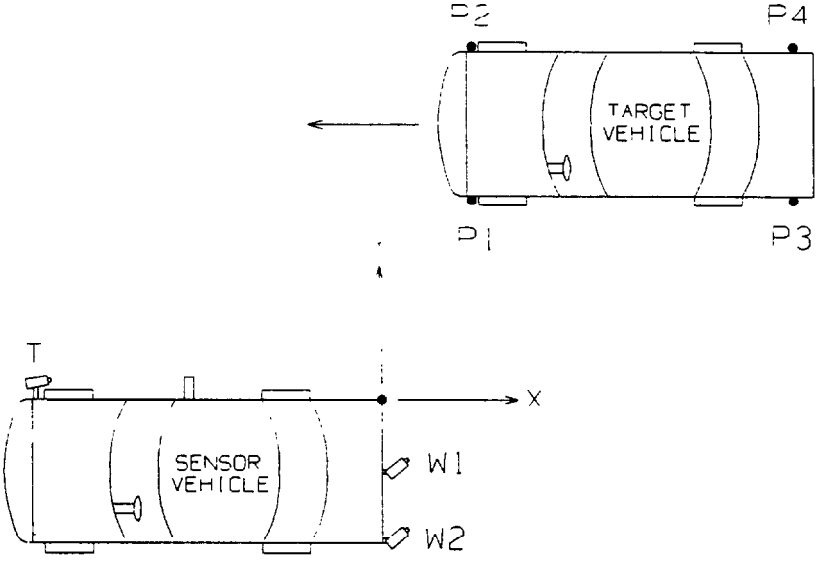


Figure 5.2-2. Arrangement for Parallel Delay Time Tests

### 5.2.2 Persistence Time

The arrangement in Figure 5.2-2 can also be used to measure the time it takes the sensor system to turn off the target indication. It is not expected that the turn off time is equal to the turn on time. The same passes used in the parallel delay time tests can also give an indication of the turn off time by plotting the position that the sensor system turns off against the target car velocity.

## 5.3 Lane Change Tests

The breakdown of lane change/merge crash scenarios into angle and sideswipe crashes all have in common the fact that the subject vehicle attempted to change lanes without adequate space between itself and the car in the lane to which it desired to move. Furthermore most LCM crashes occur with the relative speed of the two vehicles being within 8 KPH of each other. The test configurations on the VRTC test track were designed with these points in mind.

### 5.3.1 Passing

The test configuration is that shown in Figure 5.3-l. The camera angles were set at T = 10°, W1 = 0° and W2 = 60°. For the first part of this test the sensor car was driven at a constant speed and passed by the target car. For the second part, the vehicles reversed roles. For the first part the sensor car was driven at speeds of 64, 80 and 96 KPH. The target car passed at relative speeds of 16 and 32 KPH. Six passes were taken for each case, ensuring that there was data taken on both the straight and curved sections of the test track. For the second part of the test, the target car was driven at 64 and 80 KPH with the sensor car passing it at relative speeds of 16 and 32 KPH. For these tests, the recorded data consisted of the time tagged video and the digitized signals going into the Megadac, including the laser rangefinder which records the distance to the target car.

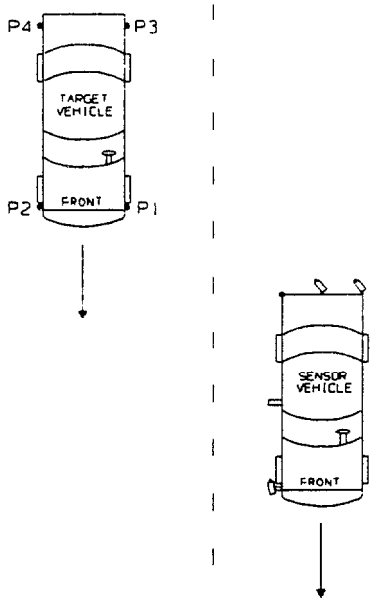


Figure 5.3-1. Configuration for Passing Tests

5.3.2 Passing With Clutter

This test was the same as that in section 5.3.1, except that now a third vehicle has been added to follow directly behind the sensor vehicle. The purpose of this test was to see whether the presence of this third vehicle can trigger a false alarm. The test configuration is shown in Figure 5.3-2. The clutter vehicle maintains the same speed as that of the sensor vehicle, while the target vehicle passes both. The separation distance d is varied in increments of 3m from 3 to 9m. The velocity of the sensor/clutter car is maintained at 64 KPH. The target car passes at relative speeds of + 16 KPH and + 32 KPH. The camera angles are the same as that in section 5.3.1.

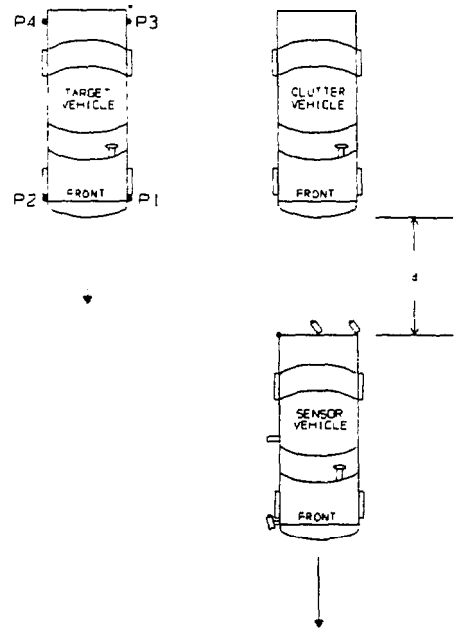


Figure 5.3-2: Configuration for Controlled Passing With Clutter

5.3.3 Three Lane Test

The test configuration is shown in Figure 5.3-3. During this test, both vehicles maintain 64 KPH as the target vehicle changes lanes from the right hand lane to the middle lane. The target vehicle changes lanes when positioned nose-to-nose with the sensor vehicle, at approximately the mid-point of the sensor vehicle, at the nose-to-tail of the sensor vehicle and at a point approximately 3m behind the sensor vehicle. Six passes were taken for each case. For the purpose of this test the camera angle of W2 was changed to 90”. The results of this test are used to determine the lateral extent of the detection zone in a dynamic situation.

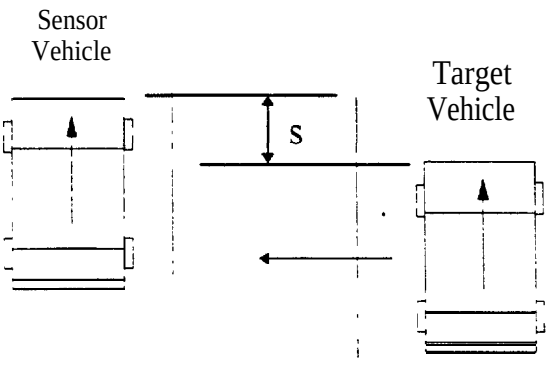


Figure 5.3-3: Configuration for Three Lane Test

5.3.4 Approach and Pass Test

The test configuration is shown in Figure 5.3-4. The camera angles were T = 10$^{o}$ W1 = 0$^{o}$ and W2 = 60$^{o}$ The sensor vehicle maintains 64 KPH. The target vehicle approaches the sensor vehicle in the same lane. The distance of closest approach will be whatever the driver feels to be safe. At this point the target vehicle changes lanes and passes the sensor vehicle. A total of six passes were taken, on both the straight and curved sections of track.

5.3.5 Merge Test

This test was meant to examine the applicability of a LCM system to a merging scenario depicted in Figure 5.3-5. The purpose was to test the positional angle dependence of the system to see if it can be of use when merging into a roadway from a standing start. With the sensor car parked along a straight line, the target car was driven past the sensor car at variable speeds along a parallel path to the straight line in the adjacent lane. The angle that the sensor car makes with the straight line is increased until the sensor systems stops reacting to the passing target car. When the angle of the sensor car is increased the angle of the video cameras is increased by the same amount. The laser rangefinder is boresighted on the target car grill, while positioned over the telephoto camera. The camera starting angles for T will be 10$^{o}$ and for W1 were 90". The angle of W2 was determined by positioning the target car at the point where the system just turns on when the car is angled at 0 degrees. Camera W2 was positioned so that the

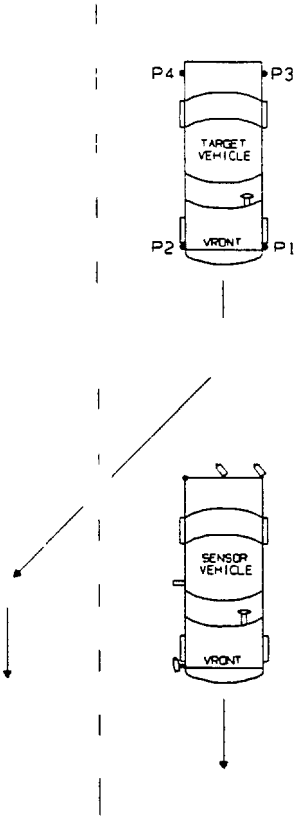


Figure 5.3-4: Configuration for Approach and Pass Tests

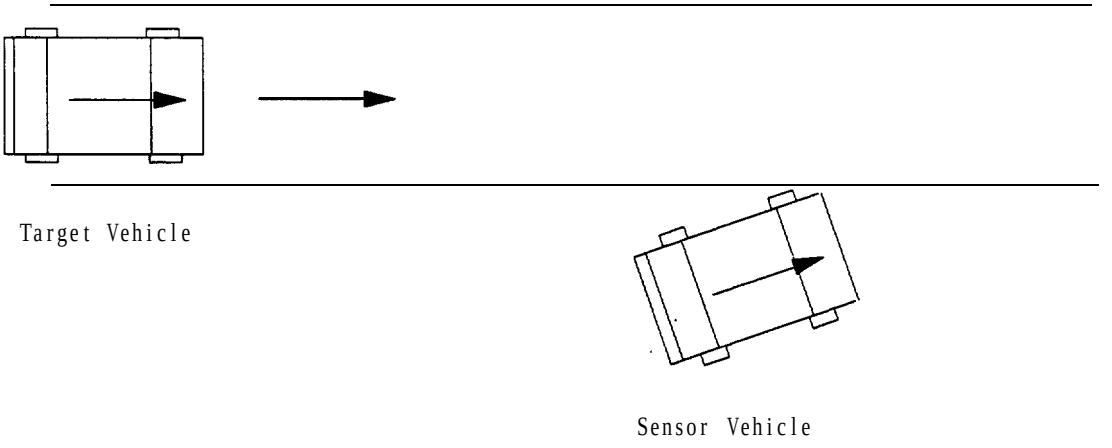


Figure 5.3-5: Configuration for Merge Tests

target car appears at the right hand edge of the screen. The angle that the sensor car makes with the trajectory of the target car was varied between 0, 15 and 30 degrees. For each angle of the sensor car, the target car was driven at speeds of 32, 48 and 64 KPH. Three passes were made at each speed.

### 5.3.6 Straight Backing Tests

A series of tests were performed wherein the sensor car is backed straight into a number of targets, with and without clutter. The targets included a .6m x .6m foil covered target, a person (holding a notebook chesthigh for reference) and the target car. A .3m strip of red tape was fixed to the front of the target car's hood as a reference marker. The camera angles were T = 10°, W1 = 0° and W2 = 45°. The sensor car was backed up to the target, as in Fig. 5.3-6. This scenario was repeated five times for each target.

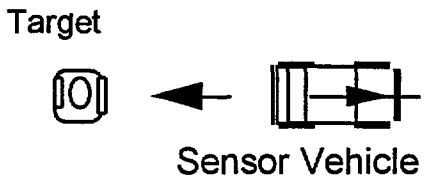


Figure 5.3-6: Configuration for Straight Backing

For the straight backing tests with clutter refer to Fig. 5.3-7. The targets for this test was a person and the target car. Lateral separation between the target and the clutter car for these tests was 1.3m for a person and .6m for a car. In this test the longitudinal separation was varied from 0 to 8m, in 2m increments. Five passes were recorded for each position and for each target.

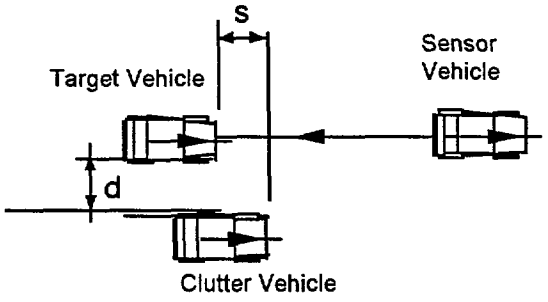


Figure 5.3-7: Straight Backing with Clutter

### 5.3.7 Curved Backing Tests

The configuration for this test is shown in Fig. 5.3-8. The sensor vehicle was backed along a curved trajectory up to the following two targets: a person holding a reference notebook and the target car. The camera angles were the same as in section 5.3.6. Five runs were performed for each target.

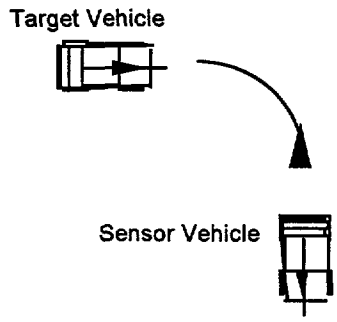


Figure 5.3-8: Configuration for Curved Backing

The introduction of clutter takes the form of Figure 5.3-9. The lateral separation distance d was 1.3m for the person and .6m for the car. The longitudinal separation s was varied from 0 to 8m, in 2m increments. The depth into the curve t was fixed at approximately 3m. This value was chosen so as to not be so large as to reproduce the straight backing case and not so small so that the sensor car is barely in the curve.

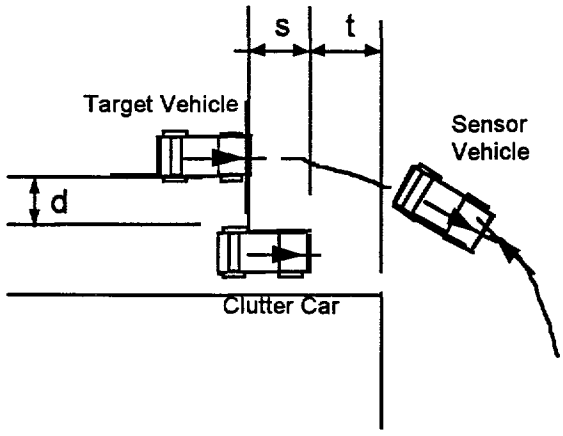


Figure 5.3-9: Configuration for Backing with Clutter

## 5.4 Road Tests

The purpose of the road test was to put the sensor system in a limited number of real world situations to see how it performs. In particular it is important to note whether any unusual circumstances cause the system to perform erratically or not as designed.

The road test takes approximately one hour. it was permitted to test more than one system as long as they can be shown to be non-interfering. The emphasis of the road test changed if the sensor system is of the lane change or backing type. The camera angles were to be set at T = 10, W1 = 0 and W2 = 60.

The road test was performed between VRTC and the town of Marysviile during daylight hours. As part of the human factors testing, VRTC personnel also tested these systems at night. Driving south on route 33 the road starts as a two-lane blacktop and then changes into a divided highway. Along this stretch, the sensor car passes vehicles, is passed by vehicles and drives by such roadway fixtures as poles, signs, guardrails (both metal and concrete) and overpasses. In the town of Marysville the sensor car was driven in city streets next to parked cars, turned corners and parallel parked. In the parking lot the sensor car was moved in and out of angled parking spots, driven between parked cars and driven along the stores in the mall.

Because of the potential for massive amounts of data analysis, the analysis approach adopted was to accumulate statistics of system performance. Decisions on system reaction were classified according to the following table:

| System Response | Situations Requiring Signal | Situations Not Requiring Signal |
|---|---|---|
| Signal | True Positive (TP) | False Positive (FP) |
| No Signal | False Negative (FN) | True Negative (TN) |

A true positive (TP) response occurs every time a target passes within the detection zone of the sensor and results in a system reaction. Thus, this parameter is a measure of the reliability of the sensor system in detecting real targets within its detection zone. On the other hand, a false positive response (FP) occurs when the sensor system indicates the presence of a target when none is within its field of view. In other words, false positives are a measure of the number of false alarms.

During most of the time that the sensor system is active, the system generates a true negative response (TN). This simply means that no targets are within the detection zone of the sensor and the system reflects this by showing no response.

However, if a target passes through the sensor's detection zone and the system fails to respond, this is classified as a false negative (FN). The consequences of this are serious since the system would indicate that it is safe to make a lane change when in reality a collision may be imminent.

The data analyst views the video data and classifies the system detects according to this table. All TP classifications should be made with an understanding of the sensor's field of view (FOV) as measured in the static tests. Any positive indications that cannot be associated with an identifiable target within the FOV should be classified as FP. in addition, any occurrences in which the system should have reacted, but didn't, is classified as a False Negative (FN). The identification of True Negative (TN) situations is more complex involving identifying every target that the sensor should not have detected and indeed did not detect. Therefore, an estimate of the percentage of TN's is determined from the following formula:

$$TN\ \% = \frac{\left(\frac{\text{Test Duration}}{\text{Latency Time}}\right) - (TP + FP + FN + I)}{\left(\frac{\text{Test Duration}}{\text{Latency Time}}\right)} \times 100\%$$

Some sensor systems claim to remove ground targets. This means a parked car, for instance, that is in the FOV of the sensor should not be detected as the sensor car passes by. If such a system does respond to ground targets, the classification becomes **I** for Inappropriate and not TP. This classification becomes **a** measure of the sensor system's ability to reject ground targets and is consistent with evaluating the sensor system relative to the manufacturer's specifications.

As the data analyst views the video data, the results can be recorded in the format shown in Figure 5.4-1. The analyst should record any comments (such as system 'loses" tractor trailer) in the description column. False Negatives (FN) should be recorded without a detect number.

## 5.5 Video Tests

The methodology for testing video systems must of necessity be different than that for all of the systems tested thus far. This is due to the fact that the non-video systems involve some form of decision making process, whereas the video system simply presents a scene and requires the driver to make the appropriate decisions. The

Figure 5.4-1

## Road Test Analysis

**System:** _____

**Date :** _____

**Time Started:** _____

**Time Finished:** _____

**Elapsed Time:** _____

| Detect # | Highway Description | Description of Target Detected | Classification | Approximate Time |
|---|---|---|---|---|
| 1 | two-lane | Road sign | TP (or I) | 00:09:52: |
| 2 | freeway | Passing semi (system loses tractor trailer) | TP | 00:13:31: |
| 3 | freeway | Passed car | TP | 00:14:25: |
| 4 | two-lane | ? (unexplained) | FP | 00:15:14: |
| 5 | city | Parked car | TP (or I) | 00:21:42: |
| --- | freeway | Passing van | FN | 00:25:11: |
| | | | | |
| | | | | |
| | | | | |
| | | | | |
| | | | | |
| | | | | |
| | | | | |
| | | | | |
| | | | | |
| | | | | |
| | | | | |
| | | | | |
| | | | | |
| | | | | |
| | | | | |
| | | | | |

criteria for evaluating a video system for backup maneuvers essentially reduce to measuring the contrast and resolution. Although it is expected that current systems are capable of resolution in excess of that required to detect an object within 30 feet, the maximum distance of interest for backing maneuvers, we have measured the angular resolution to see how a video system may degrade contrast by degrading the sharpness of an object. This test also determines the contrast transfer function from the scene to the monitor in various lighting conditions, and for a number of different targets, as well as performs field of view measurements.

### 5.5.1 Equipment

Targets

Standard contrast targets were constructed in the following manner. The targets were fiat 8.5 x 11 inch sheets. They were made out of paper and mounted in adjacent proximity on a sturdy flat surface. The two sheets were of different shades of gray. Altogether three different targets were constructed of varying contrasts.

Besides the three standard targets, a Macbeth color rendition chart was also used. This chart contains squares of a variety of colors of known chromaticity and reflectance. Besides the color squares there is also a series of squares of varying shades of gray with known reflectance.

For the resolution measurements the target used was a standard NBS resolution test target as shown in Figure 5.5-1, consisting of alternating white and dark lines of different sizes, both horizontal and vertical. This kind of target evolved to measure video system quality.

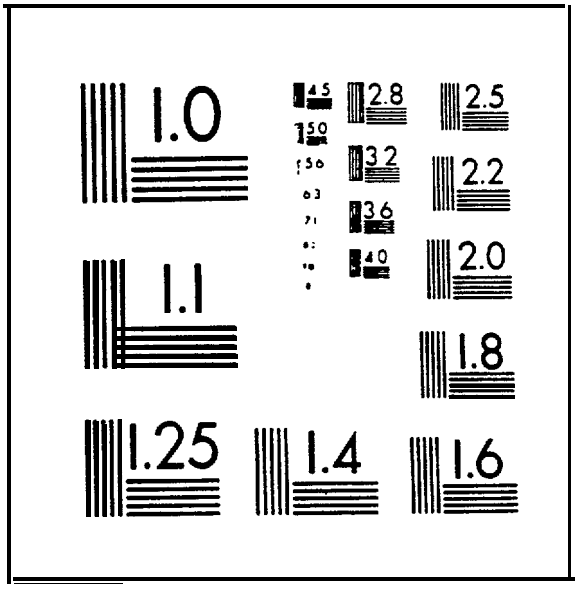


Figure 5.5-1: NBS bar chart.

Photometer/Filter

A photometer was used for determining the luminance of the objects under test, Since the user of these systems will be human, the photometer must have a photopic spectral response to give luminance as opposed to radiance. The probe itself should have a fine enough resolution to be able to measure luminance on a restricted portion of the monitor screen. For this purpose a spot photometer was used. In addition, an incidence photometer was used to measure the general background illumination. A photopic filter was also used that blocks out the long wavelength radiation. This was used as a check to see whether the camera includes the near infrared radiation when establishing contrast levels.

Grid

Using a sheet of paper approximately 2 by 3 feet, the sheet was divided into 2 inch squares. This grid was used in tests of the camera distortion.

5.5.2 Testing

Field of View/Distortion

The grid described above, was held in front of the camera, normal to the axis of the camera, and at a distance such that it completely fill the monitor screen. The resulting picture was recorded an video tape. Also, the distance from the camera to the grid was recorded.

Resolution

The NBS target described in section 5.5.1 .1 was positioned at approximately 15 cm from the cameras. The target was moved across the field of view at a height equal to the camera height. At least five positions were recorded on video tape across the field of view.

Standard Contrast Test

The standard target was positioned vertically at a distance of approximately 3 feet from the camera. The distance should be such that the target fills a fair fraction of the TV monitor. The distance and the scene was recorded on the VCR. Using the photometer, the luminance of the two sections of the standard target was measured. The same measurement was made on the monitor. The monitor measurements were repeated having placed the photometric filter in front of the video camera. The incident light level'was also recorded. All measurements were summarized in a table.

The above measurements were repeated with the remaining two targets.

Since both of the systems under test were monochrome systems, it was useful to determine whether the systems can distinguish between two different colors, close in brightness. Using the Macbeth color chart, two colors were chosen with the same luminance. The standard luminance measurements were made with the target at varying distances.

Extended Contrast Test

The purpose of this section was to extend the contrast test to various lighting conditions. Each lighting condition was performed with all three of the standard targets and with a person, car and trash can.

Lighting conditions included but were not necessarily limited to:

1. Daylight - clear sky
2. Daylight - overcast
3. Night - street lamp illumination
4. Night - as little illumination as possible
5. Night - backlighting by car headlights
6. Night - illumination by Acura backing and brake lights