# BRIDGE FORMULA WEIGHTS

U.S. Department
of Transportation

**Federal Highway Administration**

**January 1994**

NOTE- For additional copies contact:
Federal Highway Administration
400 7th Street, SW
Washington, D.C. 20590
(202) 366-2212

$$W = 500\left[\frac{LN}{N-1} + 12N + 36\right]$$

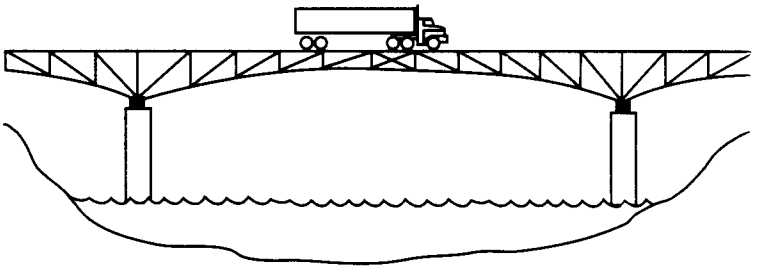

Publication No. FHWA-MC-94-007
HIA-20/1(15M)E
HIA-10/R1-96(7.5M)
HIA-20/10-98(10M)

Three questions are addressed by this pamphlet with regard to the Bridge Formula: What is it? Why is it necessary? How is it used?

## WHAT IS IT?

$$W = 500\left[\frac{LN}{N-1} + 12N + 36\right]$$

W = the maximum weight in pounds that can be carried on a group of two or more axles to the nearest 500 pounds.

L = the distance in feet between the outer axles of any two or more consecutive axles.

N = the number of axles being considered.

This formula limits the weight on groups of axles in order to reduce the risk of damage to highway bridges. Allowable weight depends on the number of axles a vehicle has and the distance between those axles. However, the single- or tandem-axle weight limits supersede the Bridge Formula limits for all axles not more than 96 inches apart.

## WHY IS THE FORMULA NECESSARY?

Bridges on Interstate System highways are used by a wide variety of traffic. They are designed to support expected loadings. However, as trucks grew heavier in the 1950's and 1960's, something had to be done to protect bridges. The solution was to tie allowable weights to the number and spacing of axles.

Axle spacing is as important as axle weight in bridge design. A bridge is analogous to thin ice on a pond. Walking on the ice concentrates a person's weight on the small area covered by the individual's feet, and the ice may break. Lying down, however, spreads the same weight over a much larger area, and the ice is less likely to break. Consider trucks crossing a bridge:



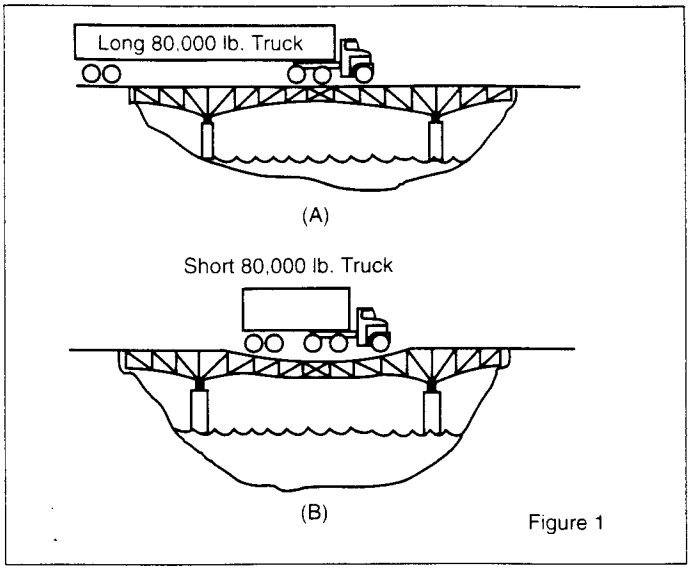

Figure 1

In Figure 1(A), the stress on bridge members as the longer truck rolls across is much less than that caused by the short vehicle in Figure 1 (B), even though both trucks have the same total weight and individual axle weights. The weight of the longer vehicle is spread out, while the shorter vehicle has all of the weight concentrated on a small area.

The Federal-Aid Highway Amendments of 1974 increased the weights allowed on the Interstate System to 20,000 pounds on a single axle, 34,000 pounds on a tandem axle, and 80,000 pounds gross weight (23 U.S.C. 127). But Congress balanced this concession to productivity by enacting the Bridge Formula. The result is that motor vehicles may be loaded to the maximum weight only if each group of axles on the vehicle and their spacing also satisfy the requirements of the Formula. This prevents the vehicle from overstressing bridges in the same way that a person lying down on thin ice woulci minimize the risk of breaking through.

Until 1982, Federal law set only upper limits (or ceilings) on Interstate System weight limits. A few States retained significantly lower weight limits which eventually became barriers to long-distance truck traffic. In 1982, Federal law was amended to make Interstate System weight limits, including the bridge formula limits, both the maximum and the minimum weights (i.e., floors and ceilings) that States must allow on the Interstate System.

## HOW IS THE FORMULA USED?

Some definitions are needed to use the Bridge Formula correctly.

Gross Weight—the weight of a vehicle or vehicle combination and any load thereon. The Federal gross weight limit on the Interstate System is 80,000 pounds.

Single-Axle Weight—The total weight on one or more axles whose centers are not more than 40 inches apart. The Federal single-axle weight limit on the Interstate System is 20,000 pounds.

Tandem-Axle Weight—The total weight on two or more consecutive axles more than 40 inches but not more than 96 inches apart. The Federal tandem-axle weight limit on the Interstate System is 34,000 pounds.

Interstate System weight limits in some States may be higher than these figures due to "grandfather" rights. When the Interstate System axle and gross weight limits were adopted in 1956, States were allowed to keep or "grandfather" those which were higher. In 1975, States were also allowed to keep "grandfathered" bridge formula limits which were higher than those established for the Interstate System.

Bridge Formula calculations yield a series of weights (pages 6-7). However, the single-axle weight limit replaces the Bridge Formula weight limit on axles not more than 40 inches apart, and the tandem-axle weight limit replaces the Bridge Formula weight limit for axles over 40 but not more than 96 inches apart. At 97 inches apart, two axles can carry 38,000 pounds and three axles 42,000 pounds, as shown in Figure 2.

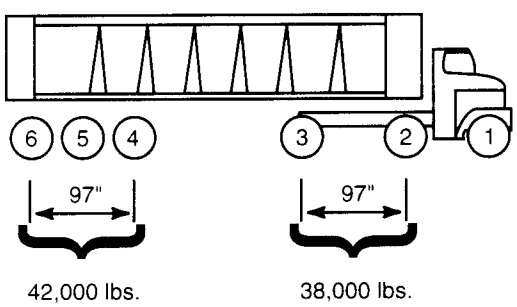


Figure 2



Federal law provides that any two or more consecutive axles may not exceed the weight computed by the Formula even though single axles, tandem axles, and gross weight are within legal limits. In other words, the axle group that includes the entire truck—sometimes called the "outer bridge" group—must comply with the Bridge Formula. But interior combinations of axles, such as the "tractor bridge" (axles 1, 2, and 3) and "trailer bridge" (axles 2, 3, 4, and 5), must also be in compliance with weights computed by the Formula (Figure 3).

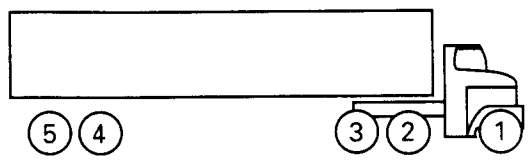


Figure 3

The most common vehicle checked for compliance with weight limit requirements is shown in Figure 3. While the Bridge Formula applies to each combination of two or more axles, experience shows that axle combinations 1 through 3, 1 through 5, and 2 through 5 are critical and must be checked. If these combinations are found to be satisfactory, all of the others on this type of vehicle will normally be satisfactory.

The vehicle with weights and axle dimensions as shown in Figure 4 will be used to illustrate a Bridge Formula check. (Continued on page 8.)

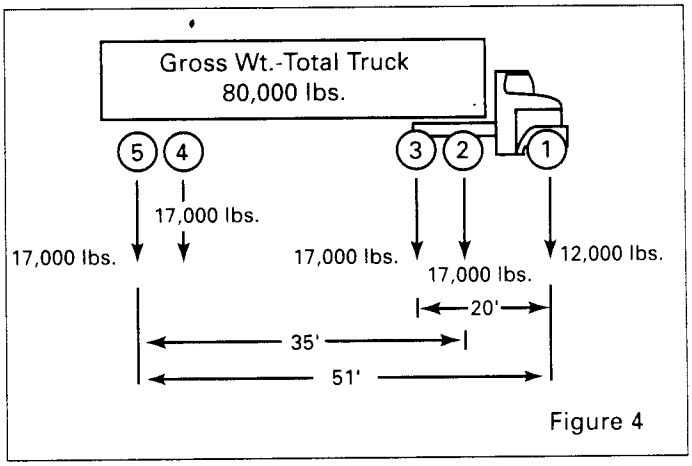


Figure 4

# PERMISSIBLE GROSS LOADS FOR VEHICLES IN REGULAR OPERATION [1]

Based on weight formula $W = 500\left[\frac{LN}{N-1} + 12N + 36\right]$

| Distance in feet (L) between the extremes of any group of 2 or more consecutive axles | Maximum load in pounds carried on any group of 2 or more consecutive axles | | | | | | | |
|---|---|---|---|---|---|---|---|---|
| N = | 2 AXLES | 3 AXLES | 4 AXLES | 5 AXLES | 6 AXLES | 7 AXLES | 8 AXLES | 9 AXLES |
| 4 (Tandem Axle Weight (see pages 4 & 5)) | 34,000 | --- | --- | --- | --- | --- | --- | --- |
| 5 | 34,000 | --- | --- | --- | --- | --- | --- | --- |
| 6 | 34,000 | --- | --- | --- | --- | --- | --- | --- |
| 7 | 34,000 | --- | --- | --- | --- | --- | --- | --- |
| 8 & less | 34,000 | 34,000 | --- | --- | --- | --- | --- | --- |
| more than 8 | 38,000 | 42,000 | --- | --- | --- | --- | --- | --- |
| 9 | 39,000 | 42,500 | --- | --- | --- | --- | --- | --- |
| 10 | 40,000 | 43,500 | --- | --- | --- | --- | --- | --- |
| 11 | --- | 44,000 | --- | --- | --- | --- | --- | --- |
| 12 | --- | 45,000 | 50,000 | --- | --- | --- | --- | --- |
| 13 | --- | 45,500 | 50,500 | --- | --- | --- | --- | --- |
| 14 | --- | 46,500 | 51,500 | --- | --- | --- | --- | --- |
| 15 | --- | 47,000 | 52,000 | --- | --- | --- | --- | --- |
| 16 | --- | 48,000 | 52,500 | 58,000 | --- | --- | --- | --- |
| 17 | --- | 48,500 | 53,500 | 58,500 | --- | --- | --- | --- |
| 18 | --- | 49,500 | 54,000 | 59,000 | --- | --- | --- | --- |
| 19 ----Example---- | --- | 50,000 | 54,500 | 60,000 | --- | --- | --- | --- |
| 20 (see page 8) | --- | 51,000 | 55,500 | 60,500 | 66,000 | --- | --- | --- |
| 21 | --- | 51,500 | 56,000 | 61,000 | 66,500 | --- | --- | --- |
| 22 | --- | 52,500 | 56,500 | 61,500 | 67,000 | --- | --- | --- |
| 23 | --- | 53,000 | 57,500 | 62,500 | 68,000 | --- | --- | --- |
| 24 | --- | 54,000 | 58,000 | 63,000 | 68,500 | 74,000 | --- | --- |
| 25 | --- | 54,500 | 58,500 | 63,500 | 69,000 | 74,500 | --- | --- |
| 26 | --- | 55,500 | 59,500 | 64,000 | 69,500 | 75,000 | --- | --- |
| 27 | --- | 56,000 | 60,000 | 65,000 | 70,000 | 75,500 | --- | --- |
| 28 | --- | 57,000 | 60,500 | 65,500 | 71,000 | 76,500 | 82,000 | --- |
| 29 | --- | 57,500 | 61,500 | 66,000 | 71,500 | 77,000 | 82,500 | --- |
| 30 | --- | 58,500 | 62,000 | 66,500 | 72,000 | 77,500 | 83,000 | --- |
| 31 | --- | 59,000 | 62,500 | 67,500 | 72,500 | 78,000 | 83,500 | --- |
| 32 | --- | 60,000 | 63,500 | 68,000 | 73,000 | 78,500 | 84,500 | 90,000 |
| 33 | --- | --- | 64,000 | 68,500 | 74,000 | 79,000 | 85,000 | 90,500 |
| 34 | --- | --- | 64,500 | 69,000 | 74,500 | 80,000 | 85,500 | 91,000 |
| 35 | --- | --- | 65,500 | 70,000 | 75,000 | 80,500 | 86,000 | 91,500 |
| 36 | --- | Exception (see page 10) | 66,000 | 70,500 | 75,500 | 81,000 | 86,500 | 92,000 |
| 37 | --- | | 66,500 | 71,000 | 76,000 | 81,500 | 87,000 | 93,000 |
| 38 | --- | --- | 67,500 | 71,500 | 77,000 | 82,000 | 87,500 | 93,500 |
| 39 | --- | --- | 68,000 | 72,500 | 77,500 | 82,500 | 88,500 | 94,000 |
| 40 | --- | --- | 68,500 | 73,000 | 78,000 | 83,500 | 89,000 | 94,500 |
| 41 | --- | --- | 69,500 | 73,500 | 78,500 | 84,000 | 89,500 | 95,000 |
| 42 | --- | --- | 70,000 | 74,000 | 79,000 | 84,500 | 90,000 | 95,500 |
| 43 | --- | --- | 70,500 | 75,000 | 80,000 | 85,000 | 90,500 | 96,000 |
| 44 | --- | --- | 71,500 | 75,500 | 80,500 | 85,500 | 91,000 | 96,500 |
| 45 | --- | --- | 72,000 | 76,000 | 81,000 | 86,000 | 91,500 | 97,500 |
| 46 | --- | --- | 72,500 | 76,500 | 81,500 | 87,000 | 92,500 | 98,000 |
| 47 | --- | --- | 73,500 | 77,500 | 82,000 | 87,500 | 93,000 | 98,500 |
| 48 | --- | --- | 74,000 | 78,000 | 83,000 | 88,000 | 93,500 | 99,000 |
| 49 | --- | --- | 74,500 | 78,500 | 83,500 | 88,500 | 94,000 | 99,500 |
| 50 | --- | --- | 75,500 | 79,000 | 84,000 | 89,000 | 94,500 | 100,000 |
| 51 | --- | --- | 76,000 | 80,000 | 84,500 | 89,500 | 95,000 | 100,500 |
| 52 | --- | --- | 76,500 | 80,500 | 85,000 | 90,500 | 95,500 | 101,000 |
| 53 | --- | --- | 77,500 | 81,000 | 86,000 | 91,000 | 96,500 | 102,000 |
| 54 | --- | --- | 78,000 | 81,500 | 86,500 | 91,500 | 97,000 | 102,500 |
| 55 | --- | --- | 78,500 | 82,500 | 87,000 | 92,000 | 97,500 | 103,000 |
| 56 | --- | Interstate Gross Weight Limit (see page 4) | 79,500 | 83,000 | 87,500 | 92,500 | 98,000 | 103,500 |
| 57 | --- | | 80,000 | 83,500 | 88,000 | 93,000 | 98,500 | 104,000 |
| 58 | --- | | --- | 84,000 | 89,000 | 94,000 | 99,000 | 104,500 |
| 59 | --- | --- | --- | 85,000 | 89,500 | 94,500 | 99,500 | 105,000 |
| 60 | --- | --- | --- | 85,500 | 90,000 | 95,000 | 100,500 | 105,500 |

[1]The permissible loads are computed to the nearest 500 pounds as required by statute.

[2]The following loaded vehicles must not operate over H15-44 bridges: 3-S2 (5-axle) with wheelbase less than 38 feet; 2-S1-2 (5-axle) wih wheelbase less than 45 feet; 3-3 (6-axle) with wheelbase less than 45 feet; and 7- 8- and 9-axle vehicles regardless of wheelbase.

Before checking a vehicle for compliance with the Bridge Formula, its single-axle, tandem-axle, and gross weight should be checked. Here the single axle (number 1) does not exceed 20,000 pounds, tandems 2-3 and 4-5 do not exceed 34,000 pounds each, and the gross weight does not exceed 80,000 pounds. These preliminary requirements are thus satisfied. The first Bridge Formula combination is checked as follows:

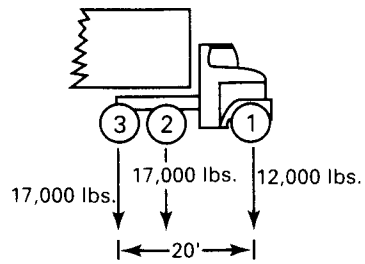


Figure 5

**Check of 1 thru 3 (Figure 5)**

Actual weight = 12,000 + 17,000 + 17,000 = 46,000 pounds.

N = 3 axles.

L= 20 feet.

$$W = 500\left[\frac{LN}{N-1} + 12N + 36\right]$$

$$W = 500\left[\frac{(20 \times 3)}{(3 - 1)} + (12 \times 3) + 36\right] = 51{,}000\#$$

W maximum = 51,000#, which is more than the actual weight of 46,000#, so the Bridge Formula requirement is satisfied.

**Example—From the Bridge Table (pages 6 & 7)**

This same number (51,000#) could have been obtained from the Bridge Table by reading down the left side to L = 20 and across to the right where N = 3.



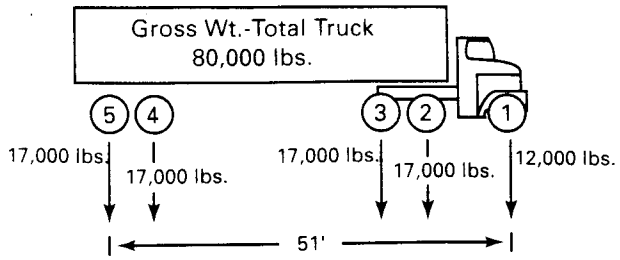


Figure 6

**Now check axles 1 thru 5 (Figure 6)**

Actual weight = 12,000 + 17,000 + 17,000 + 17,000 + 17,000 = 80,000#.

W maximum, from the Bridge Table for "L" of 51 feet and "N" of 5 = 80,000#.

Therefore, this axle spacing is satisfactory.

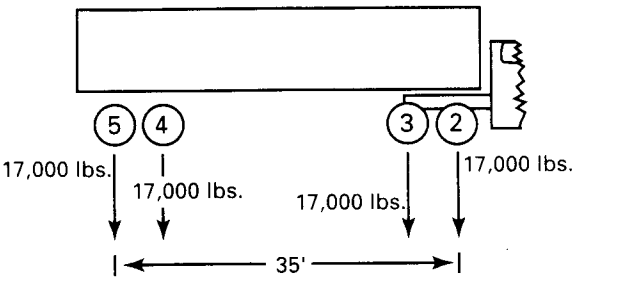


Figure 7

**Now check axles 2 thru 5 (Figure 7)**

Actual weight = 17,000 + 17,000 + 17,000 + 17,000= 68,000#.

W maximum, Bridge Table for "L" of 35 feet and "N" of 4 = 65,500#.

This is a violation because the actual weight exceeds the weight allowed by the Bridge Formula. To correct the situation, some load must be removed from the vehicle or the axle spacing (35 feet) must be increased.

## EXCEPTION TO FORMULA AND BRIDGE TABLE

Federal law (23 U.S.C.127) includes one exception to the Bridge Formula and the Bridge Table—two consecutive sets of tandem axles may carry 34,000 pounds each if the overall distance between the first and last axles of these tandems is 36 feet or more. For example, a five-axle tractor-semitrailer combination may carry 34,000 pounds both on the tractor tandem (axles 2 and 3) and the trailer tandem (axles 4 and 5), provided axles 2 and 5 are spaced at least 36 feet apart. Without this exception, the Bridge Formula would allow an actual weight of only 66,000 to 67,500 pounds on tandems spaced 36 to 38 feet apart.

## BRIDGE FORMULA APPLICATION TO SINGLE UNIT TRUCKS

The procedure described above can be used to check any axle combinations, but several closely spaced axles usually produce the most critical situation.

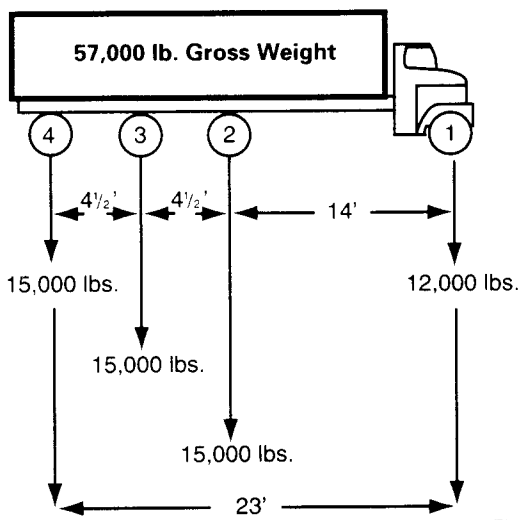


Figure 8

The truck in Figure 8 satisfies the single axle weight limit (12,000# is less than 20,000#), the tandem axle limit (30,000# is less than 34,000#) and gross weight limit (57,000# is less than 80,000#). With these restrictions satisfied, a check will be made for Bridge Formula requirements, axles 1 through 4.



Actual weight = 12,000 + 15,000 +15,000 + 15,000 = 57,000#.
W maximum for "N" of 4 and "L" of 23 feet = 57,500 from the Bridge Table.
Since axles 1 thru 4 are satisfactory, check axles 2 thru 4:
W (actual) = 15,000 + 15,000 + 15,000 = 45,000#.
W maximum for "N" of 3 and "L" of 9 feet= 42,500# (From the Bridge Table).

This is a violation. The load would have to be reduced, axles added, or spacing increased, to comply with the Bridge Formula .

CAUTION

This pamphlet paraphrases the actual provision in 23 U.S.C. 127 and 23 CFR 658 for the sake of clarity. In case of a dispute, the statue and regulations will govern.

Previous editions of this pamphlet released under the title "Bridge Gross Weight Formula", dated April 1984, remain valid. Neither the Formula nor any resulting maximum gross weight values (table entries) have been changed.